Homework: Elliptical Orbits

- **Starship Enterprise orbits planet *Tralfamador* in an elliptical orbit with semi-major axis *a = 0.02 Au (*astronomical units)* and semi-major axis *b = 0.01 Au (*astronomical units).***

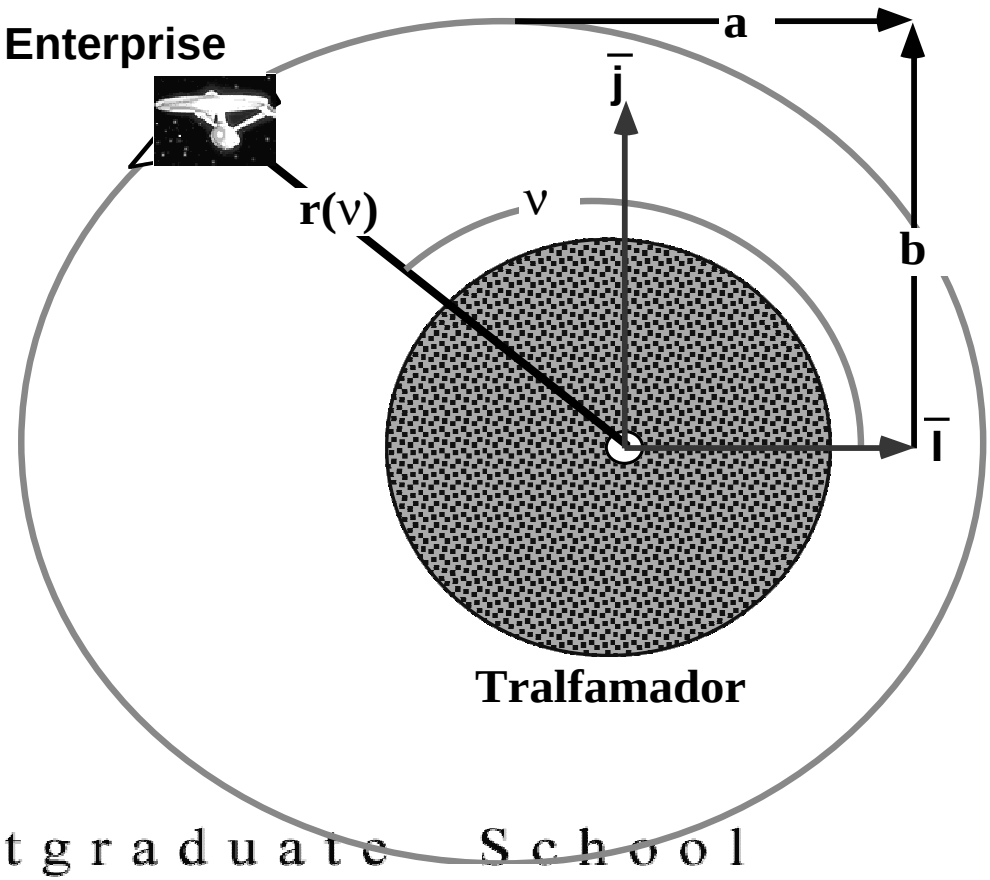

Homework: Elliptical Orbits

Homework:Elliptical Orbits

(cont'd)

- **Compute the peri*famador (Minimum distance)* and the ap*famador* (Maximum distance) of the orbit**

- **Show that** $$\frac{\left[r_{max} + r_{min}\right]}{2} = a$$

- **Show that** $$\frac{\left[r_{max} - r_{min}\right]}{\left[r_{max} + r_{min}\right]} = e$$

(do all calculations both symbolically and numerically)

Homework:Solution

Homework:Solution:

- ***Magnitude*** $$r(\nu) = \frac{a\left[1 - e^2\right]}{\left[1 + e\cos(\nu)\right]}$$

- ***Eccentricity***

$$e = \sqrt{1 - \left[\frac{b}{a}\right]^2} = \sqrt{1 - \left[\frac{0.01}{0.02}\right]^2} = \frac{\sqrt{3}}{2} \approx .8660$$

Homework:Solution

Homework:Solution
Values of ν for min/max

- **Values of ν for min/max**

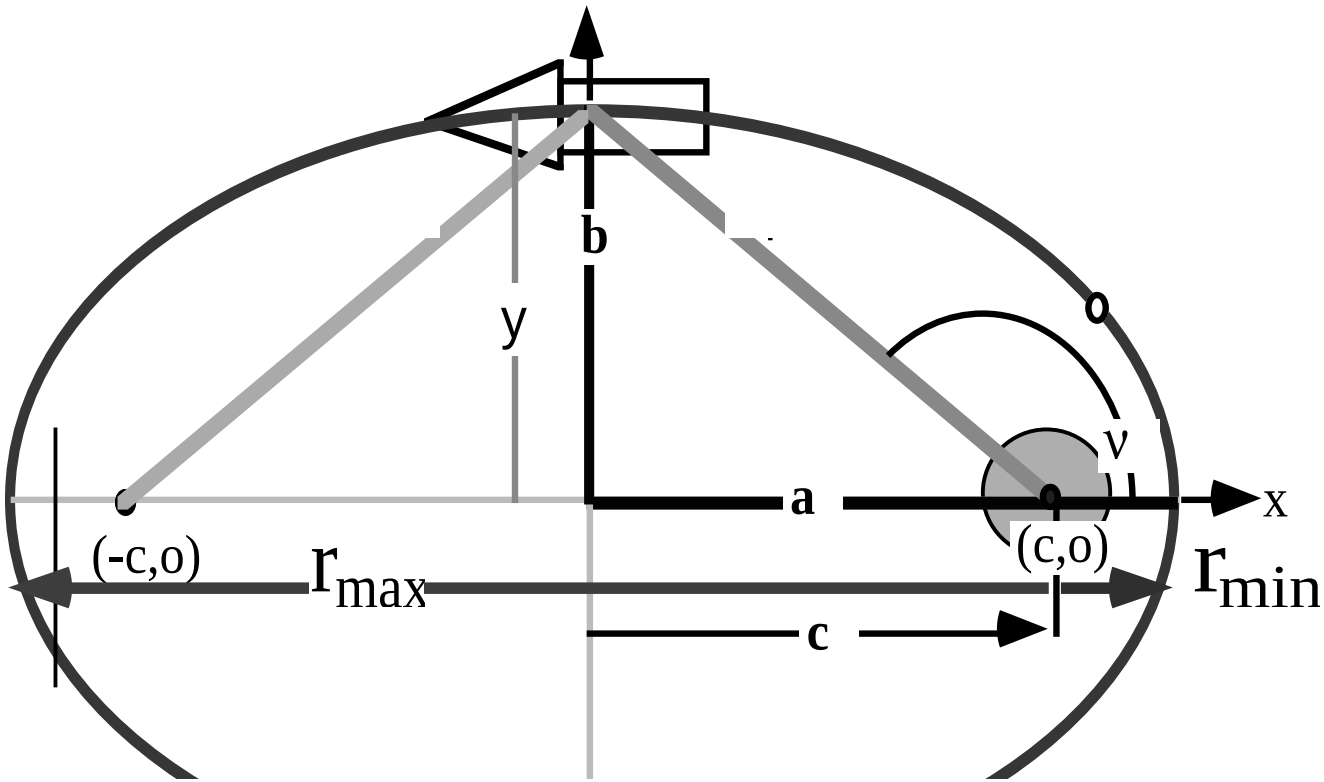

$$\text{min: } \nu = 0, \pm 2n\pi \quad \Rightarrow \quad \text{max: } \nu = (\pm 2n+1)\pi, \; n = 0, 1, 2, \ldots$$

Homework:Solution

Homework: Solution
• Minimum and maximum distances

- **Minimum and maximum distances**

perifamador, -- Minimum distance:

$$\Downarrow$$

$$\nu = 0, \pm 2n\pi \;\Rightarrow r_{min} = a\frac{1-e^2}{\left[1+e\cos\left(\pm 2n\pi\right)\right]} = a\frac{1-e^2}{\left[1+e\right]} = a\frac{\left[1+e\right]\left[1-e\right]}{\left[1+e\right]} =$$

$$\boxed{a\left[1-e\right] = \left(0.02\text{ au}\right)\left[1-0.866\right] = 0.00268\text{ au}}$$

apfamador, -- Maximum distance:

$$\Downarrow$$

$$\nu = \left(\pm 2n+1\right)\pi \;\Rightarrow r_{max} = a\frac{1-e^2}{\left[1+e\cos\left(\left(\pm 2n+1\right)\pi\right)\right]} = a\frac{1-e^2}{\left[1-e\right]} = a\frac{\left[1+e\right]\left[1-e\right]}{\left[1-e\right]} =$$

$$\boxed{a\left[1+e\right] = \left(0.02\text{ au}\right)\left[1+0.866\right] = 0.03732\text{ au}}$$

Homework:Solution

- **Semi-major axis and eccentricity**

$$\frac{\left[\mathbf{r}_{\mathbf{max}} + \mathbf{r}_{\mathbf{min}}\right]}{2} = \frac{\left[a\left[1+e\right] + a\left[1-e\right]\right]}{2} = \mathbf{a}$$

$$e \approx \frac{\left[0.03732\ \text{au} + 0.00268\ \text{au}\right]}{2} = \frac{0.04\ \text{au}}{2} = 0.02\ \text{au}$$

$$\frac{\left[\mathbf{r}_{\mathbf{max}} - \mathbf{r}_{\mathbf{min}}\right]}{\left[\mathbf{r}_{\mathbf{max}} + \mathbf{r}_{\mathbf{min}}\right]} = \frac{\left[a\left[1+e\right] - a\left[1-e\right]\right]}{\left[a\left[1+e\right] + a\left[1-e\right]\right]} = \frac{2\,a\,e}{2\,a} = e$$

$$e \approx \frac{\left[0.03732\ \text{au} - 0.00268\ \text{au}\right]}{\left[0.03732\ \text{au} + 0.00268\ \text{au}\right]} = \frac{.03464}{.04} = 0.8660$$