1300nm Single Mode Pigtailed Lasers

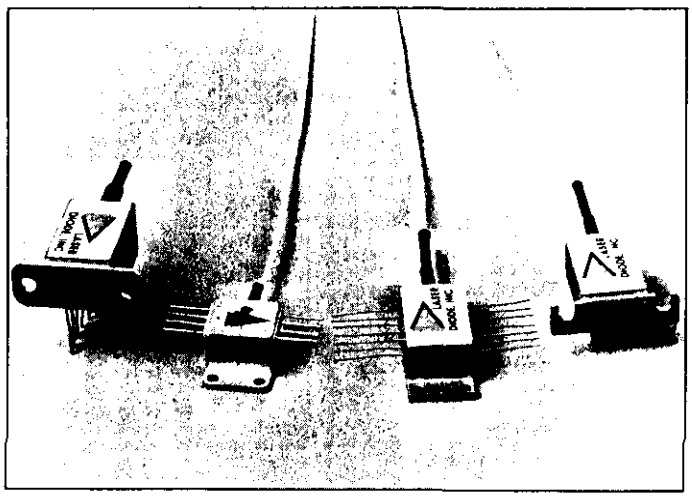

FEATURES

- InGaAsP Buried Crescent
- Low Threshold Current
- Hermetically Sealed Package
- Extended Operating Temperature Range
- Internal Thermo-Electric Cooler
- Internal InGaAs Photodetector
- Wide Modulation Bandwidth
- Polarization Preserving Fiber Option
- Excellent for Analog and Digital Application

DESCRIPTION

The SCW-1300 series consists of a high performance, InGaAsP buried crescent laser chip coupled to a single mode fiber pigtail. The low threshold laser offers high coupled powers and modulation bandwidths of up to 1.5 GHz. A high temperature chip purge and burn in guarantee long laser lifetime. The epoxy free, hermetic packages offer excellent coupling stability.
The lasers may be supplied as a chip on copper heat sink or in a variety of hermetically sealed 14 pin dual in line or butterfly packages. These packages contain an internal peltier cooler, a precision thermistor and a back facet InGaAs monitor diode.

The lasers may also be pigtailed to polarization preserving fiber. Custom packages are also available upon request.

ELECTRO-OPTICAL CHARACTERISTICS AT 25° C

Parameter	Symbol	Min.	Typ.	Max.	Units
Laser Emission Wavelength *(1)	λ	1270	1300	1330	nm
Spectral Width	$\Delta\lambda$		3	5	nm
Threshold Current	I_{th}	10	20	50	mA
Drive Current above I_{th} to reach Rated Output Power	I_m		20	40	mA
Forward Voltage	V_F		1.2	1.8	V
Rise Time	T_R		0.5	1.0	nsec
Fall Time	T_F		0.5	1.0	nsec
Output Power	P_o				
-From Chip		5.0			mW
-Option 001		0.25			mW
-Option 002		0.5			mW
-Option 003		1.0			mW
-Option 004		2.0			mW
Operating Temperature Range	T_o	20		+70	°C
Storage Temperature	T_s	40		+80	°C

*1 Other wavelengths available upon request.

BACK FACET MONITOR DIODE

Parameter	Symbol	Min.	Typ.	Max.	Units
Monitor Photocurrent at Rated Output Power	I_D	50			μA
Dark Current at -5V			30		nA
Capacitance			20		pF
Rise/Fall Time			2.0		nsec
Photodiode Reverse Voltage				10	V

THERMO-ELECTRIC COOLER AND THERMISTOR

Parameter	Symbol	Min.	Typ.	Max.	Units
Cooler Capacity	ΔT	40			°C
Current Required for ΔT			0.7	1.0	A
Voltage Required for ΔT			1.8	2.3	V
Thermistor Resistance		9.5K	10K	10.5K	Ω
Temperature Coefficient of Resistance			4.4		%/°C

TYPICAL CHARACTERISTICS

Power vs. Current Curve

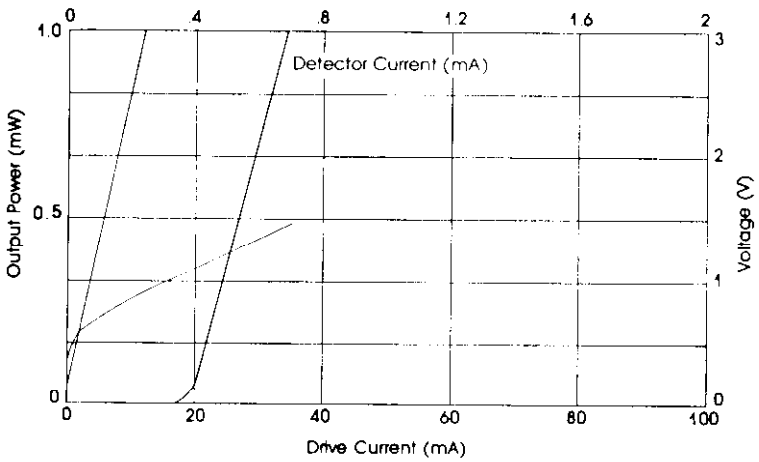

Spectrum

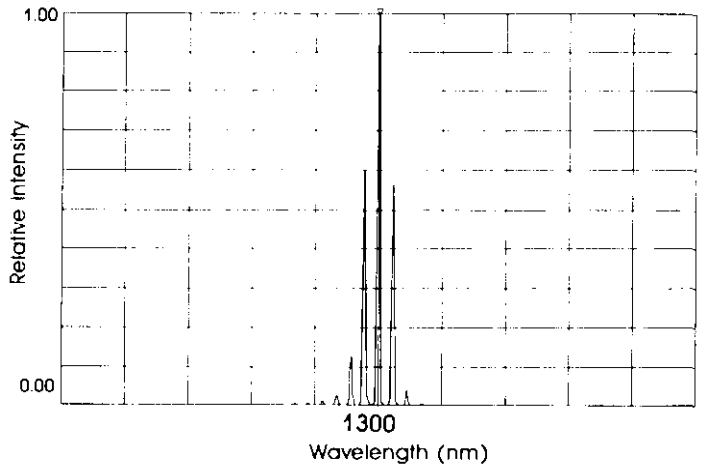

Modulation Bandwidth

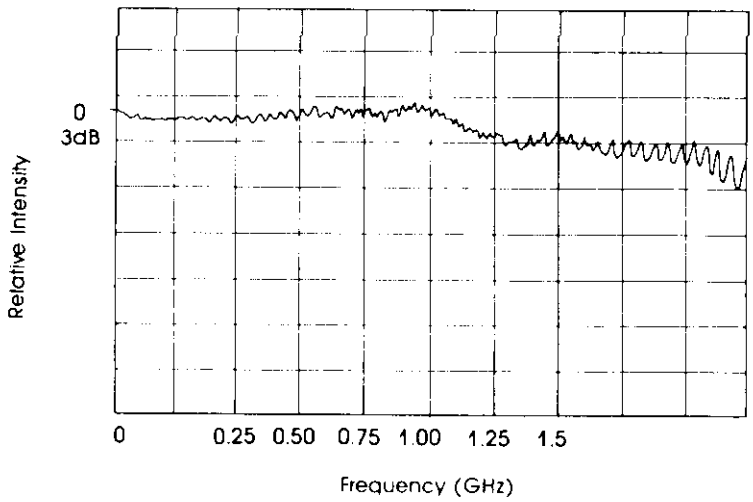

TYPICAL CHARACTERISTICS

Laser Temperature vs. Cooler Current
65 degrees C Case Temperature
100mA Through Laser at 1.9V

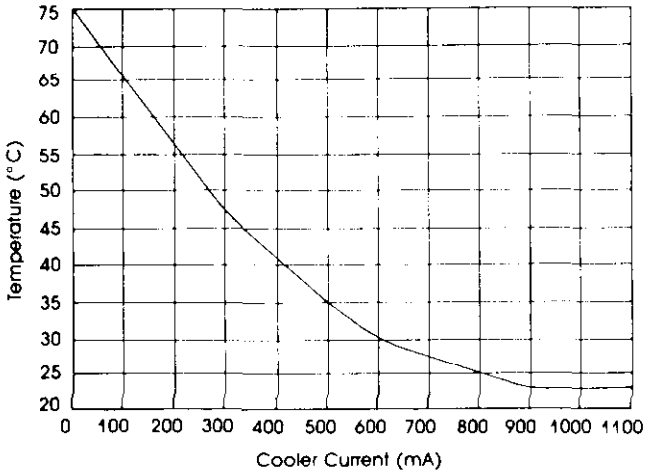

Thermistor Resistance vs. Temperature

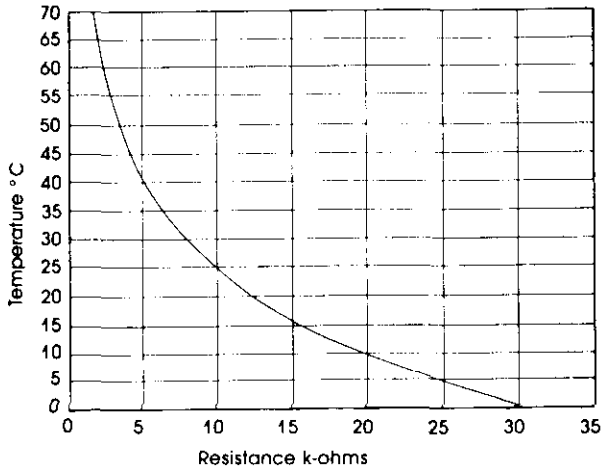

ORDERING INFORMATION

Part Number	Description
SCW-1300	Laser on Copper Submount
SCW-1301	"Longhorn Style" 14 pin Dual In Line with Internal Cooler, Thermistor, Back Facet Monitor Diode and Single Mode Fiber Pigtail
SCW-1302	High Profile 14 pin Dual In Line with Internal Cooler, Thermistor, Back Facet Monitor Diode and Single Mode Fiber Pigtail
SCW-1303	High Speed Butterfly Package with Internal Cooler, Thermistor, Back Facet Monitor Diode and Single Mode Fiber Pigtail
SCW-1304	Low Profile Butterfly Package with Internal Cooler, Thermistor, Back Facet Monitor Diode and Single Mode Fiber Pigtail

Output Power Options

-001	0.25mW
-002	0.50mW
-003	1.0mW
-004	2.0mW

PACKAGE DRAWINGS

SCW-1300
(Back Facet View)

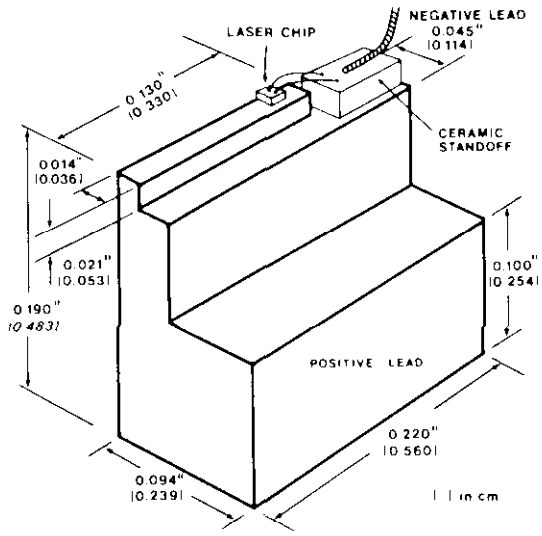

PACKAGE DRAWINGS

SCW-1301

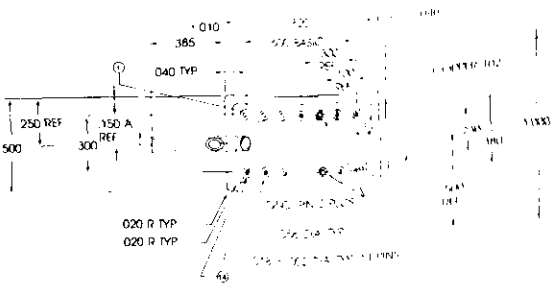

Pin	Function
1	Cooler anode (+)
2	No Connection
3	NC
4	NC
5	Laser Anode (+) Case ground (+)
6	NC
7	Photodetector cathode (-)
8	Photodetector anode (+)
9	Laser Cathode (-)
10	Thermistor*, case ground (+)
11	Thermistor
12	NC
13	NC
14	Cooler cathode (-)

*Floating Thermistor (Optional)

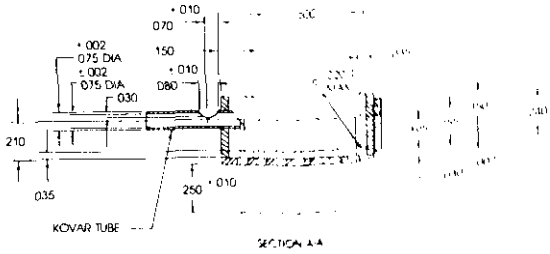

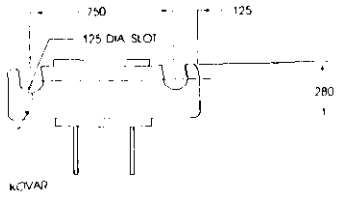

SCW-1302

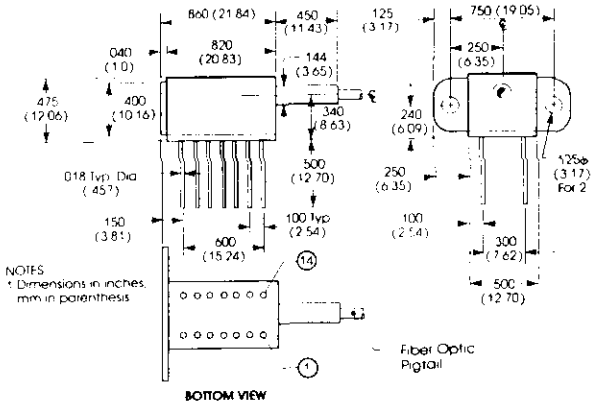

SCW-1303

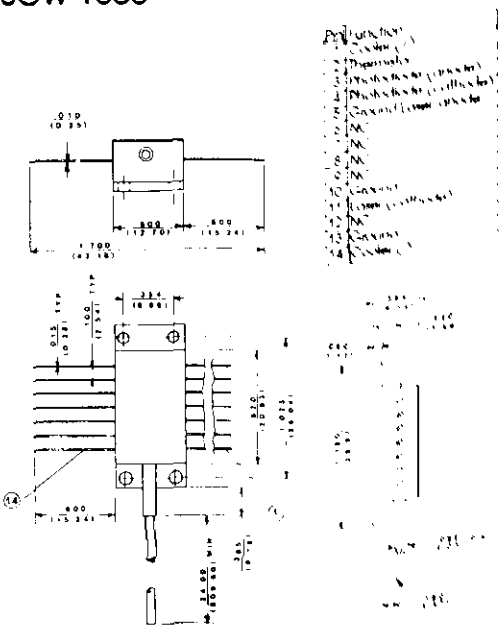

SCW-1304

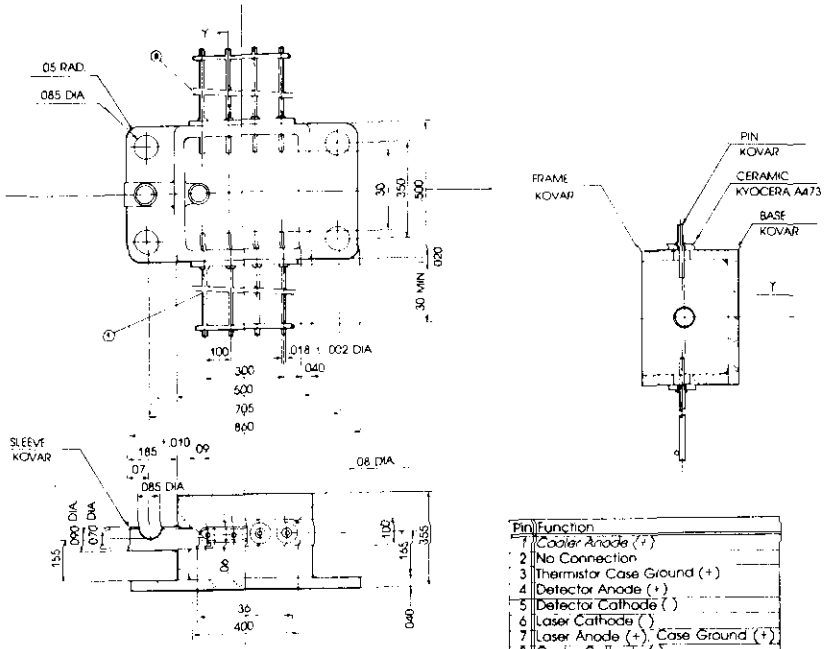

Pin	Function
1	Cooler Anode (+)
2	No Connection
3	Thermistor Case Ground (+)
4	Detector Anode (+)
5	Detector Cathode (-)
6	Laser Cathode (-)
7	Laser Anode (+), Case Ground (+)
8	Cooler Cathode (-)

LASER SAFETY

Indium Gallium Arsenide Phosphide lasers emit infrared radiation which is invisible to the human eye. When in use, safety precautions should be taken to avoid the possibility of eye damage. Do not stare directly at the device or look at operating laser at close range. If viewing is required, the beam should only be observed by reflection from a matte surface utilizing an image convertor or by use of a suitable fluorescent screen.

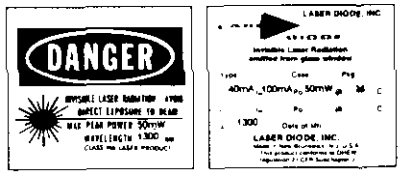

LASER DIODE, Inc., reserves the right to make changes at any time as deemed practical and/or necessary to improve the design and to supply the best possible product.
Information provided is believed at this time to be accurate and reliable. No responsibility is assumed for its use, nor for any infringements on the rights of others.
* For further information on these products or LASER DIODE, Inc., please call:

CAUTION

Use of controls or adjustments or performance of procedures other than those specified herein may result in hazardous radiation exposure.

LASER DIODE, INC.
MORGAN ELECTRONICS DIVISION
1130 SOMERSET ST., NEW BRUNSWICK, NJ 08901
(201) 249-7000 (FAX) 201-249-9165 (TWX) 710-998-0597

1300nm Multimode Pigtailed Lasers

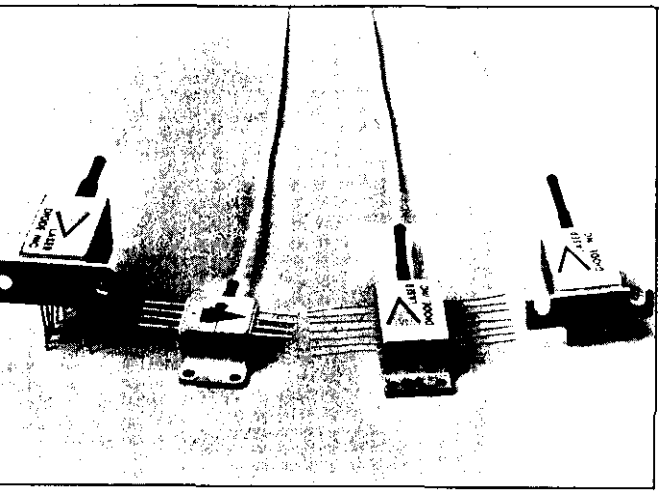

FEATURES

- InGaAsP Buried Crescent
- Low Threshold Current
- Hermetically Sealed Package
- Extended Operating Temperature Range
- Internal Thermo-Electric Cooler
- Internal InGaAs Photodetector
- Multimode Devices for Reduced Modal Noise
- Other Fiber Pigtails such as 62.5μm and 100μm also Available
- Excellent for Analog and Digital Application

ESCRIPTION

he LCW-1300 series consists of a high performance, GaAsP buried crescent laser chip coupled to a multi ode fiber pigtail. The multi longitudinal mode ectrum significantly reduces problems with modal oise. The low threshold laser offers high coupled power nd modulation bandwidths of up to 1.5 GHz. A high emperature chip purge and burn in guarantee long aser lifetime. The epoxy free, hermetic packages offer xcellent coupling stability.

The lasers may be supplied as a chip on copper heat sink or in variety of hermetically sealed 14 pin dual in line or butterfly packages. These packages contain an internal peltier cooler, a precision thermistor and a back facet InGaAs monitor diode.

The lasers may also be pigtailed to polarization preserving fiber. Custom packages are also available upon request.

LECTRO-OPTICAL CHARACTERISTICS AT 25° C

Parameter	Symbol	Min.	Typ.	Max.	Units
Laser Emission Wavelength *(1)	λ	1270	1300	1330	nm
Spectral Width	$\Delta\lambda$		3	5	nm
Threshold Current	I_{th}	10	20	50	mA
Drive Current above I_{th} to reach Rated Output Power	I_m		20	40	mA
Forward Voltage	V_F		1.2	1.8	V
Rise Time	T_R		0.5	1.0	nsec
Fall Time	T_F		0.5	1.0	nsec
Output Power	P_o				
-From Chip		5.0			mW
-Option 001		1.0			mW
-Option 002		2.0			mW
-Option 003		4.0			mW
Operating Temperature Range	T_o	-20		+70	°C
Storage Temperature	T_s	-40		+80	°C

*1 Other wavelengths available upon request.

BACK FACET MONITOR DIODE

Parameter	Symbol	Min.	Typ.	Max.	Units
Monitor Photocurrent at Rated Output Power	I_D	50			μA
Dark Current at -5V			30		nA
Capacitance			20		pF
Rise/Fall Time			2.0		nsec
Photodiode Reverse Voltage				10	V

THERMO-ELECTRIC COOLER AND THERMISTOR

Parameter	Symbol	Min.	Typ.	Max.	Units
Cooler Capacity	ΔT	40			°C
Current Required for ΔT			0.7	1.0	A
Voltage Required for ΔT			1.8	2.3	V
Thermistor Resistance		9.5K	10K	10.5K	Ω
Temperature Coefficient of Resistance			-4.4		%/°C

TYPICAL CHARACTERISTICS

Power vs. Current Curve

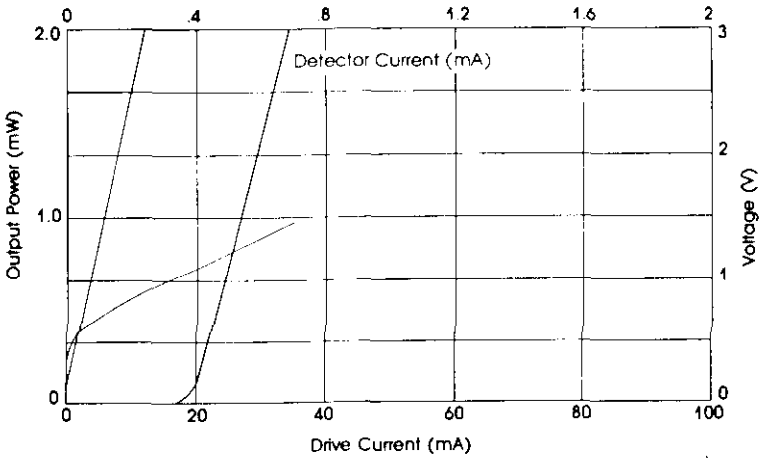

Spectrum

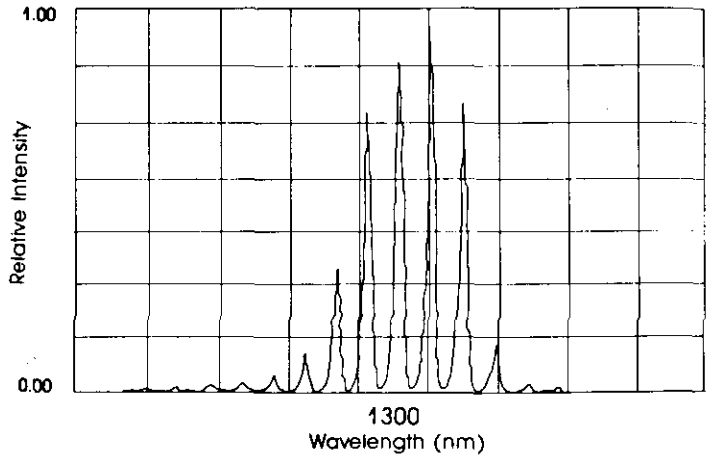

Modulation Bandwidth

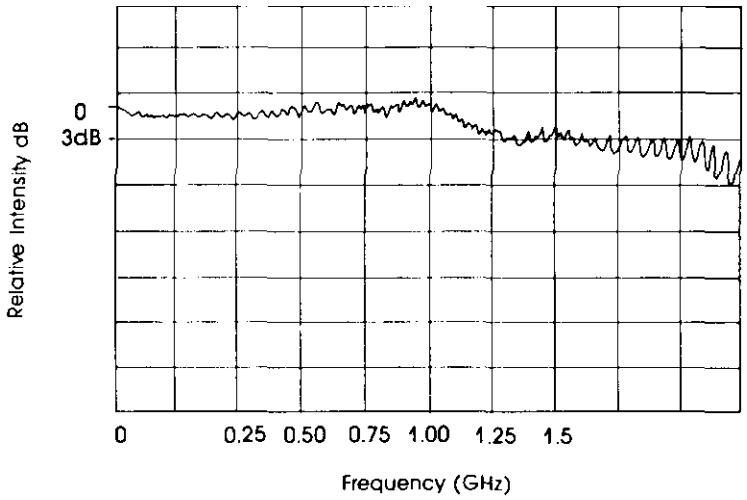

PICAL CHARACTERISTICS

Laser Temperature vs. Cooler Current
65 degrees C Case Temperature
100mA Through Laser at 1.9V

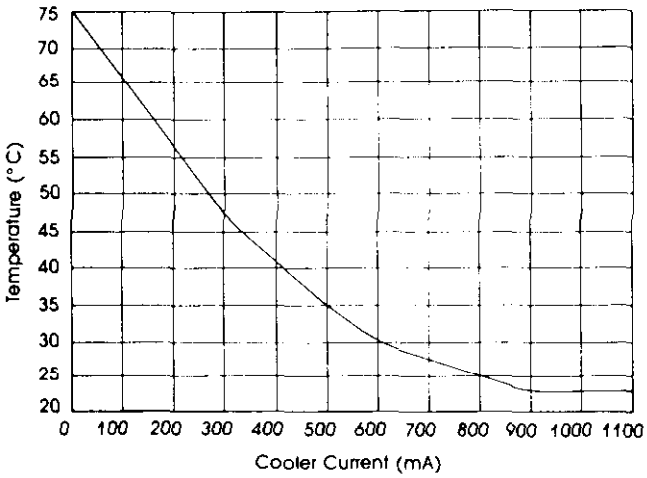

Thermistor Resistance vs. Temperature

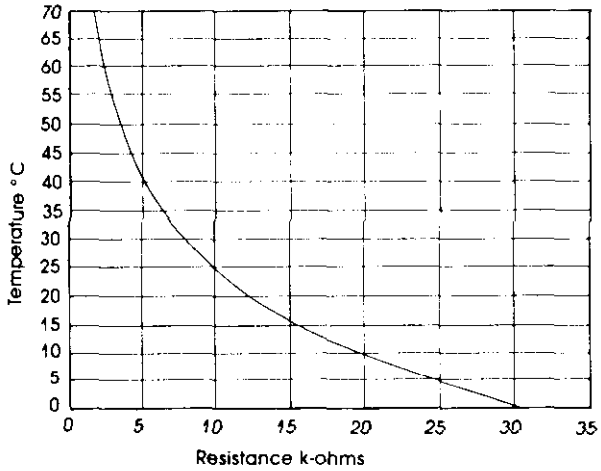

DERING INFORMATION

t Number	Description
W-1300	Laser on Copper Submount
W-1301	"Longhorn Style" 14 pin Dual In Line with Internal Cooler, Thermistor, Back Facet Monitor Diode and Multi Mode Fiber Pigtail
W-1302	High Profile 14 pin Dual In Line with Internal Cooler, Thermistor, Back ~~Facet Monitor Diode and Multi~~ Mode Fiber Pigtail
W-1303	High Speed Butterfly Package with Internal Cooler, Thermistor, Back Facet Monitor Diode and Multi Mode Fiber Pigtail
W-1304	Low Profile Butterfly Package with Internal Cooler, Thermistor, Back Facet Monitor Diode and Multi Mode Fiber Pigtail

tput Power Options

1	1.0mW
2	2.0mW
3	4.0mW

CKAGE DRAWINGS

LCW-1300
(Back Facet View)

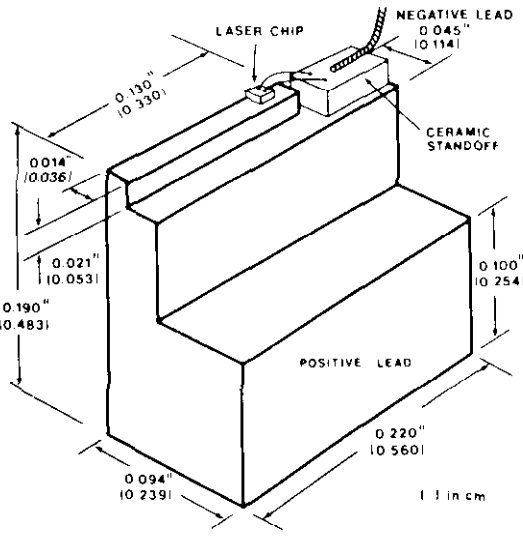

PACKAGE DRAWINGS

LCW-1301

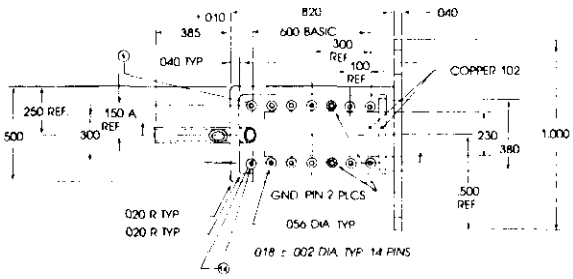

Pin	Function
1	Cooler anode (+)
2	No Connection
3	NC
4	NC
5	Laser Anode (+) Case ground (+)
6	NC
7	Photodetector cathode ( )
8	Photodetector anode (+)
9	Laser Cathode ( )
10	Thermistor*, case ground (+)
11	Thermistor
12	NC
13	NC
14	Cooler cathode ( )

* Floating Thermistor Optional

LCW-1302

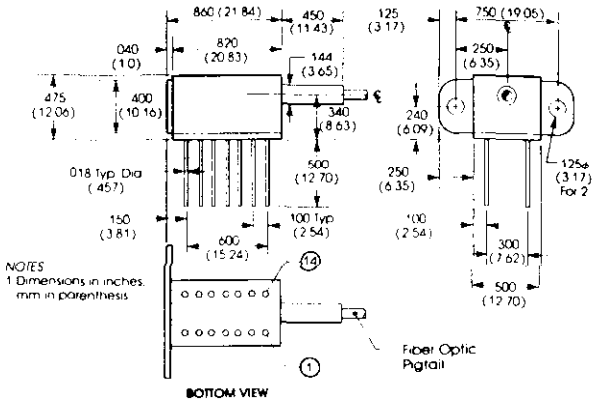

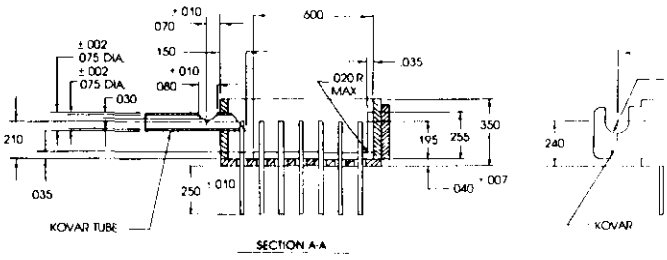

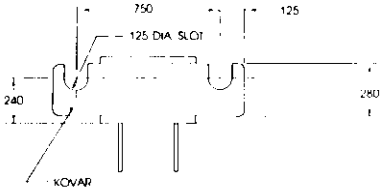

LCW-1303

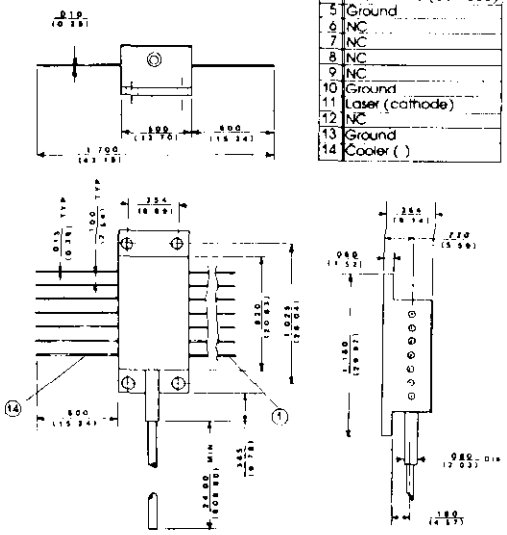

Pin	Function
1	Cooler (+)
2	Thermistor
3	Photodiode (anode)
4	Photodiode (cathode)
5	Ground
6	NC
7	NC
8	NC
9	NC
10	Ground
11	Laser (cathode)
12	NC
13	Ground
14	Cooler ( )

LCW-1304

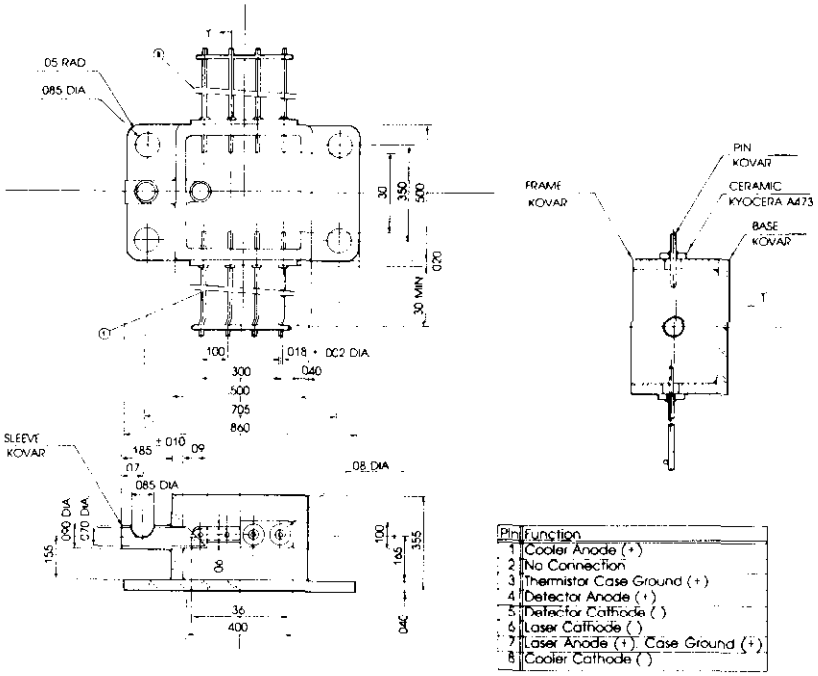

Pin	Function
1	Cooler Anode (+)
2	No Connection
3	Thermistor Case Ground (+)
4	Detector Anode (+)
5	Detector Cathode ( )
6	Laser Cathode ( )
7	Laser Anode (+), Case Ground (+)
8	Cooler Cathode ( )

LASER SAFETY

Indium Gallium Arsenide Phosphide lasers emit infrared radiation which is invisible to the human eye. When in use, safety precautions should be taken to avoid the possibility of eye damage. Do not stare directly at the device or view an operating laser at close range. If viewing is required, the beam should only be observed by reflection from a matte surface utilizing an image convertor or by use of a suitable fluorescent screen.

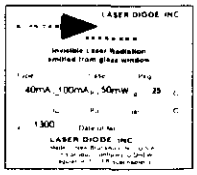

LASER DIODE, Inc., reserves the right to make changes at any time as deemed practical and/or necessary to improve the design and to supply the best possible product.
Information provided is believed at this time to be accurate and reliable. No responsibility is assumed for its use, nor for any infringements on the rights of others.
* For further information on these products of LASER DIODE, Inc., please call:

CAUTION

Use of controls or adjustments or performance of procedures other than those specified herein may result in hazardous radiation exposure.

LASER DIODE, INC.
MORGAN ELECTRONICS DIVISION
1130 SOMERSET ST., NEW BRUNSWICK, NJ 08901
(201) 249-7000 (FAX) 201-249-9165 (TWX) 710-998-0597

1550nm Single Mode Pigtailed Lasers

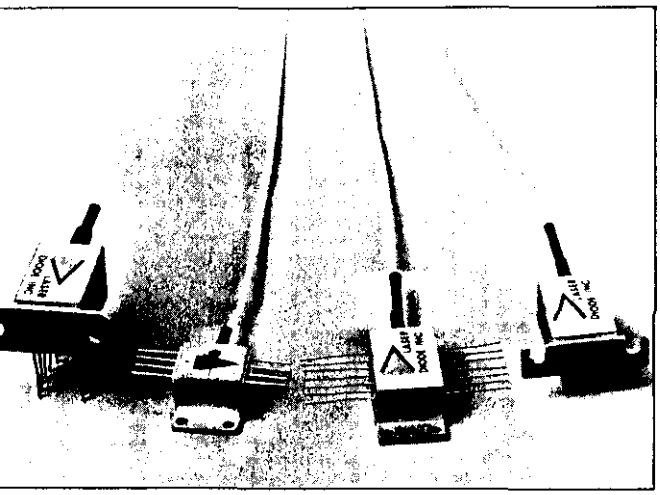

FEATURES

- InGaAsP Buried Crescent
- Low Threshold Current
- Hermetically Sealed Package
- Extended Operating Temperature Range
- Internal Thermo-electric Cooler
- Internal InGaAs Photodetector
- Wide Modulation Bandwidth
- Excellent for Analog and Digital Application

ESCRIPTION

e SCW-1500 Series consists of InGaAsP buried esent laser diode chip with an emission wavelength 1550nm pigtailed to a single mode fiber pigtail. A gh temperature chip purge and burn-in guarantee ng laser lifetime. The epoxy free, hermetic packages fer excellent coupling stability.

e lasers may be supplied as a chip on copper heat-sink or in a variety of hermetically sealed 14 pin dual in line or butterfly packages. These packages contain an internal peltier cooler, a precision thermistor and a back facet InGaAs monitor diode.

The lasers may also be pigtailed to polarization preserving fiber. Custom packages are also available upon request.

ELECTRO-OPTICAL CHARACTERISTICS AT 25°C

Parameter	Symbol	Min.	Typ.	Max.	Units
Laser Emission Wavelength	λ	1520	1550	1580	nm
Spectral Width	$\Delta\lambda$		3	5	nm
Threshold Current	Ith	10	30		mA
Drive Current above I_{th} to reach Rated Output Power	Im		25	40	mA
Forward Voltage	VF		1.2	2.0	V
Rise Time	TR		0.5	1.0	nsec
Fall Time	TF		0.5	1.0	nsec
Output Power	P_O				
-From Chip		*5.0*			mW
-Option 001		0.25			mW
-Option 002		0.5			mW
-Option 003		1.0			mW
Operating Temperature Range	To	-20		+70	°C
Storage Temperature	Ts	-40		+80	°C

TYPICAL CHARACTERISTICS

BACK FACET MONITOR DIODE

Parameter	Symbol	Min.	Typ.	Max.	Units
Monitor Photocurrent at Rated Output Power	I_D	50			μA
Dark Current at -5V			30		nA
Capacitance			20		pF
Rise/Fall Time			2.0		nsec
Photodiode Reverse Voltage				10	V

THERMO-ELECTRIC COOLER AND THERMISTOR

Parameter	Symbol	Min.	Typ.	Max.	Units
Cooler Capacity	ΔT	40			°C
Current Required for ΔT			0.7	1.0	A
Voltage Required for ΔT			1.8	2.3	V
Thermistor Resistance		9.5	10K	10.5	Ω
Temperature Coefficient of Resistance			-4.4		%/°C

Laser Temperature vs. Cooler Current
65 degrees C Case Temperature
100mA Through Laser at 1.9V

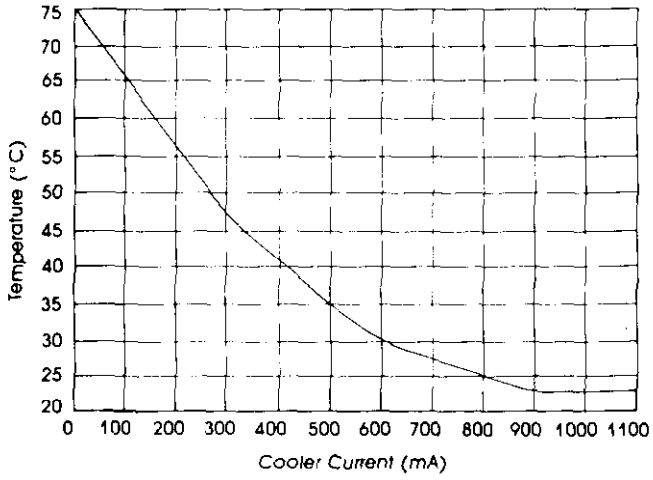

Thermistor Resistance vs. Temperature

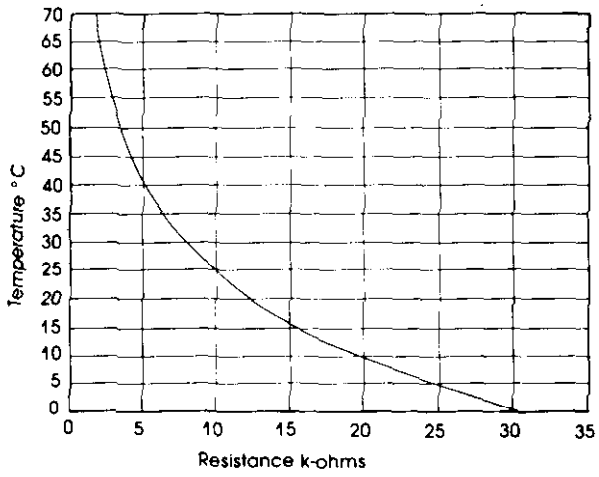

L-I Curve

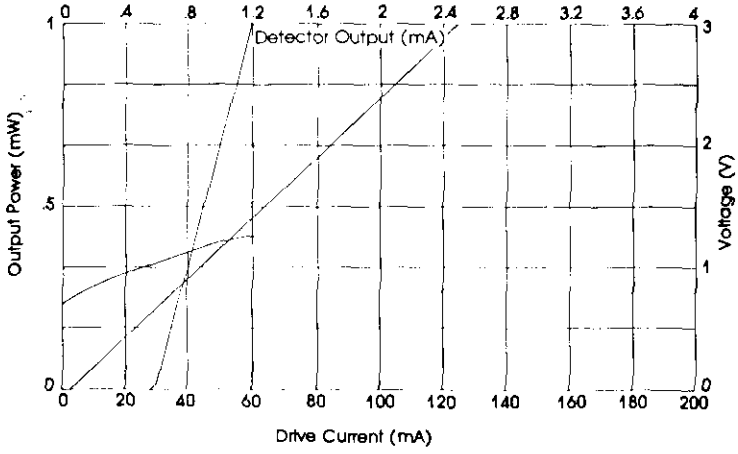

Spectrum

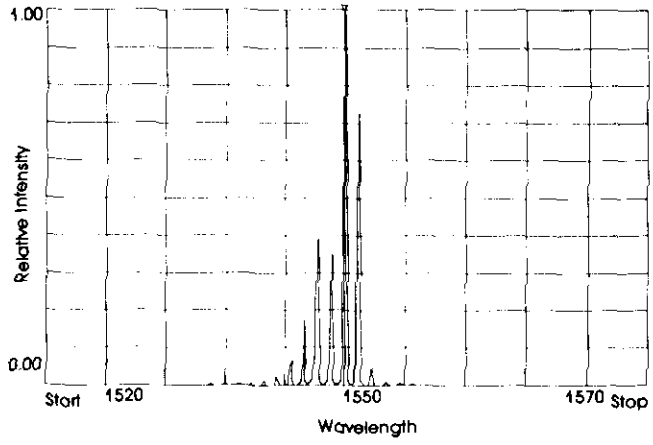

SCW-1501

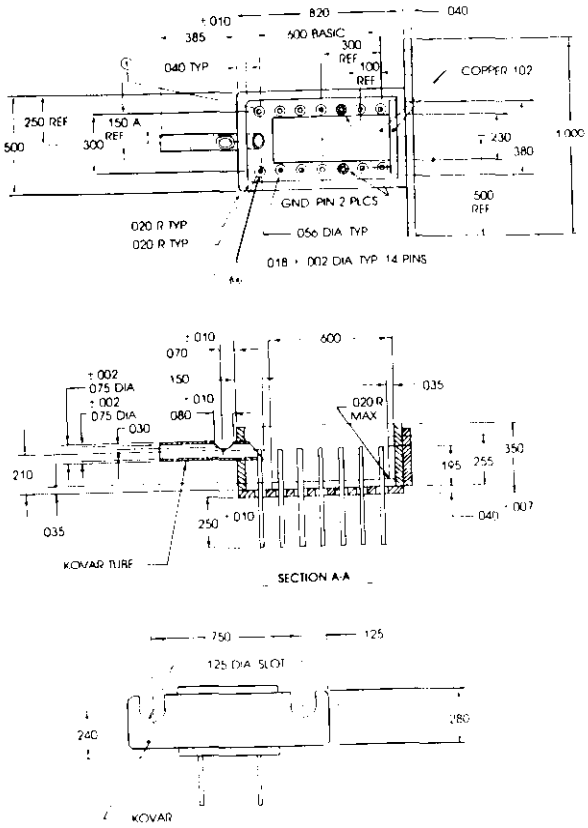

Pin	Function
1	Cooler anode (+)
2	No Connection
3	NC
4	NC
5	Laser Anode (+)
	Case ground (+)
6	NC
7	Photodetector cathode ( )
8	Photodetector anode (+)
9	Laser Cathode ( )
10	Thermistor* case ground (+)
11	Thermistor
12	NC
13	NC
14	Cooler cathode ( )

* Floating Thermistor Optional

SCW-1502

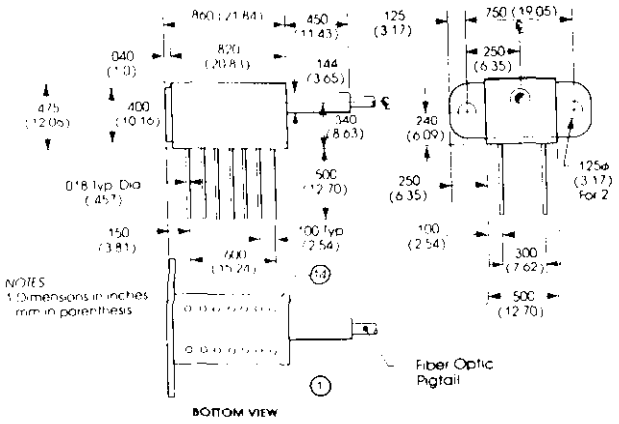

SCW-1503

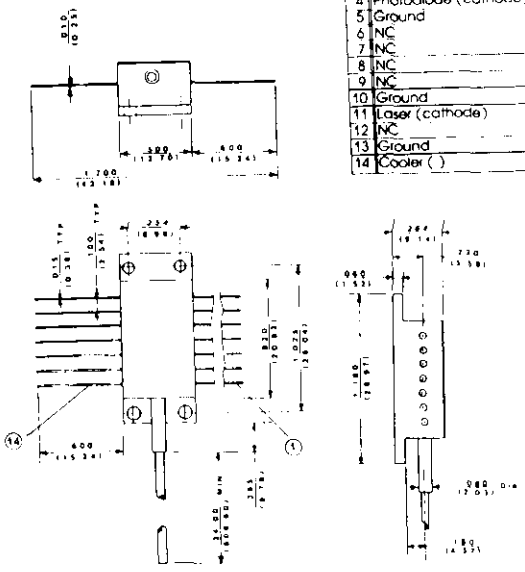

Pin	Function
1	Cooler (+)
2	Thermistor
3	Photodiode (anode)
4	Photodiode (cathode)
5	Ground
6	NC
7	NC
8	NC
9	NC
10	Ground
11	Laser (cathode)
12	NC
13	Ground
14	Cooler ( )

SCW-1504

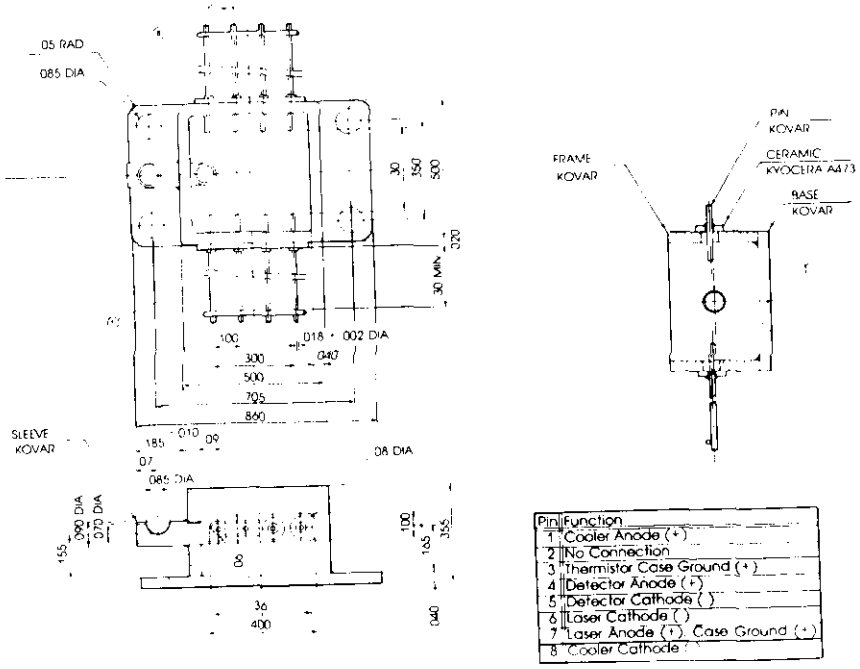

Pin	Function
1	Cooler Anode (+)
2	No Connection
3	Thermistor Case Ground (+)
4	Detector Anode (+)
5	Detector Cathode ( )
6	Laser Cathode ( )
7	Laser Anode (+), Case Ground (+)
8	Cooler Cathode ( )

ORDERING INFORMATION

Part Number	Description
SCW-1500	Laser on Copper Submount
SCW-1501	"Longhorn Style" 14 pin Dual In Line with Internal Cooler, Thermistor, Back Facet Monitor Diode and Single Mode Fiber Pigtail
SCW-1502	High Profile 14 pin Dual In Line with Internal Cooler, Thermistor, Back Facet Monitor Diode and Single Mode Fiber Pigtail
SCW-1503	High Speed Butterfly Package with Internal Cooler, Thermistor, Back Facet Monitor Diode and Single Mode Fiber Pigtail
SCW-1504	Low Profile Butterfly Package with Internal Cooler, Thermistor, Back Facet Monitor Diode and Single Mode Fiber Pigtail

Output Power Options

-001	0.25mW
-002	0.50mW
-003	1.0mW

LASER SAFETY

Indium gallium arsenide phosphide lasers emit infrared radiation which is invisible to the human eye. When in use, safety precautions should be taken to avoid the possibility of eye damage.

Do not stare directly at the device or view an operating laser at close range. If viewing is required, the beam should only be observed by reflection from a matte surface utilizing an image convertor or by use of a suitable fluorescent screen.

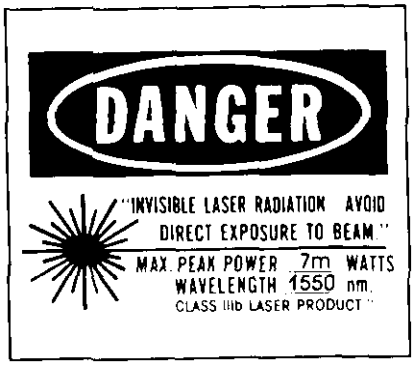

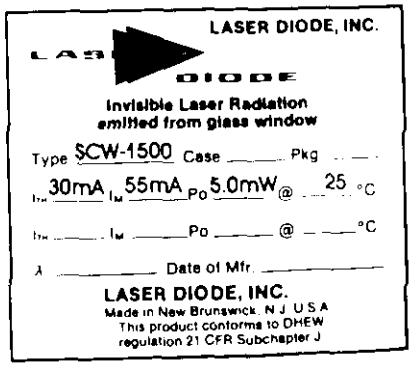

CAUTION: *Use of controls or adjustments or performance of procedures other than those specified herein may result in hazardous radiation exposure.*

LASER DIODE, Inc., reserves the right to make changes at any time as deemed practical and/or necessary to improve the design and to supply the best possible product.

Information provided is believed at this time to be accurate and reliable. No responsibility is assumed for its use, *nor for any* infringements on the rights of others.

*For further information on this product or others or LASER DIODE, Inc., please call:

LASER DIODE

LASER DIODE, INC.
MORGAN ELECTRONICS DIVISION
1130 SOMERSET ST., NEW BRUNSWICK, NJ 08901
(201) 249-7000 (FAX) 201-249-9165 (TWX) 710-998-0597

DIGITAL FIBER OPTIC LASER TRANSMITTER

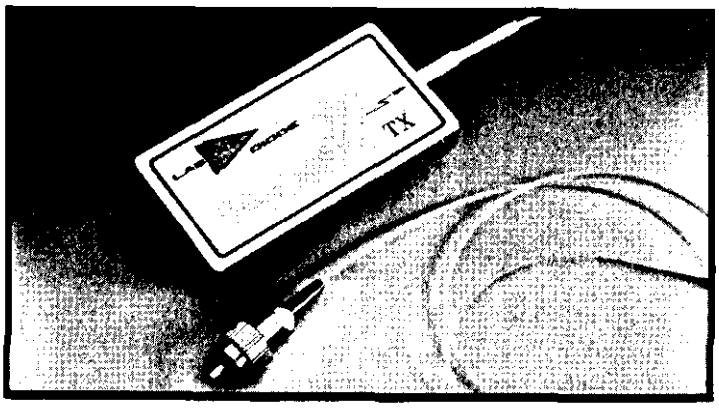

FEATURES:

- **Data Rates to 200 Mb/s**
- **1.3μm or 1.55μm Laser Diode**
- **Singlemode Fiber**
- **-5.2 Volt Operation**
- **20 Pin Package**
- **ECL or PECL Data Compatible**
- ***SONET & HiPPI Applications***

DESCRIPTION:

The TL-1000 Series is a line of laser based, digital fiber-optic transmitters used in high performance long wavelength applications. The modules operate at NRZ data rates of 10Mb/s to 200Mb/s. Data input signal interfaces are differential ECL or PECL compatible. The optical transmitter incorporates an uncooled, high reliability InGaAsP laser diode coupled to a singlemode fiber. The coupling technique utilizes advanced laser welding technology for stable performance over temperature. Optical feedback is incorporated to provide a constant average optical output. Also included is circuitry to compensate for the change in the laser's slope efficiency over temperature. *The result is a highly stable transmitter to be used in high performance applications. The transmitter provides* a voltage calibrated optical power monitor, laser bias monitor and a transmit disable function. An internal "soft start" circuit protects the laser from voltage spikes during power-up. These units are available in a compact 20 pin dual-in-line package with a terminated fiber pigtail. Matching digital receivers are available which, when used together provide a simple to use, rugged, fiber optic link.

TRANSMITTER PERFORMANCE @ T_A 25 C

PARAMETER	Symbol	Min	Typ	Max	Units
Voltage Input-High	V_{IH}	-1.025	-0.880	-0.810	Volts
Voltage Input-Low	V_{IL}	-1.810	-1.700	-1.620	Volts
NRZ Data Rate[1]	DR	10		200	Mbps
Optical Wavelength[2]					
TL-1003	λ	1280	1310	1335	nm
TL-1005		1520	1550	1580	
Power Supply[3]					
-5.2±0.25 Volts	I	150	200	mA	

Notes: [1] Transmitters with higher data rates are available. See model TL-1020 or consult the Sales Dept.

[2] Wavelengths with tighter tolerances can be specified.

[3] +5 volt only operation is available.

TRANSMITTER PERFORMANCE

Parameter	Symbol	Min	Typ	Max	Units
Optical Power (Avg)[3,4] TL-1003-013 or TL-1005-013 TL-1003-010 or TL-1005-010 TL-1003-008 or TL-1005-008	P_o	 -13 -10 -08	 -12 -9 -09		dBm
Extinction Ratio	E_x	10			dB
Rise and Fall Time[5]	t_r/t_f			1.5	ns
Spectral Width[6]	$\Delta\lambda$		3	5	nm
Wavelength Shift[7]	λ_p/T		0.5	1.0	nm/°C

Notes: [3] Average power measurement assumes 50% duty cycle.

[4] Higher power options available. Consult the Sales Department.

[5] Measured from 10% to 90%

[6] Measured at full width, half maximum.

[7] Maximum shift of the peak wavelength per degree Centigrade

PIN DESCRIPTIONS

V_{ee} & V_{cc} - In a negative ECL application, V_{ee} is -5.2 volts and V_{cc} is ground, as shown in the circuit on the next page. In this case, the data inputs switch around V_{bb} (pin 19) = -1.3 volts. In a positive ECL application, V_{ee} is ground and V_{cc} is +5.0 volts. In this case the data inputs switch around V_{bb} = +3.7 volts.

Optical Power Monitor - Provides a calibrated output voltage proportional to the average optical output. The monitor voltage is referenced to V_{ee}. A calibration value (optical watts/volts) is supplied with each unit.

Laser Bias Monitor - Provides a calibrated voltage proportional to the laser bias current.

TX Disable - When this pin is either grounded or remains floating, the transmitter will be enabled. When this pin is connected to -5.2 volts, the unit will not transmit optically regardless of the input.

Data Inputs - ECL inputs terminated with 50Ω to -2 volts (or equivalent) for ECL applications or 50Ω to +3.7 volts for positive ECL.

V_{bb} - An output pin which can be used to operate the transmitter in a single-ended data input mode. In a negative ECL application, V_{bb} = -1.3 volts. In a positive ECL application, V_{bb} = +3.7 volts.

MECHANICAL/ENVIRONMENTAL

Operating Temperature	-20 to +70°C
Storage Temperature	-40 to +85°C
Optical Connectors[8]	1 meter 9/125μm fiber pigtail with FC/PC.
Dimensions	2.14 (l) x 1.14 (w) x 0.350 (h) inches 54.3 (l) x 28.9 (w) x 8.9 (h) millimeters

Notes: [8] Other optical connectors are available.

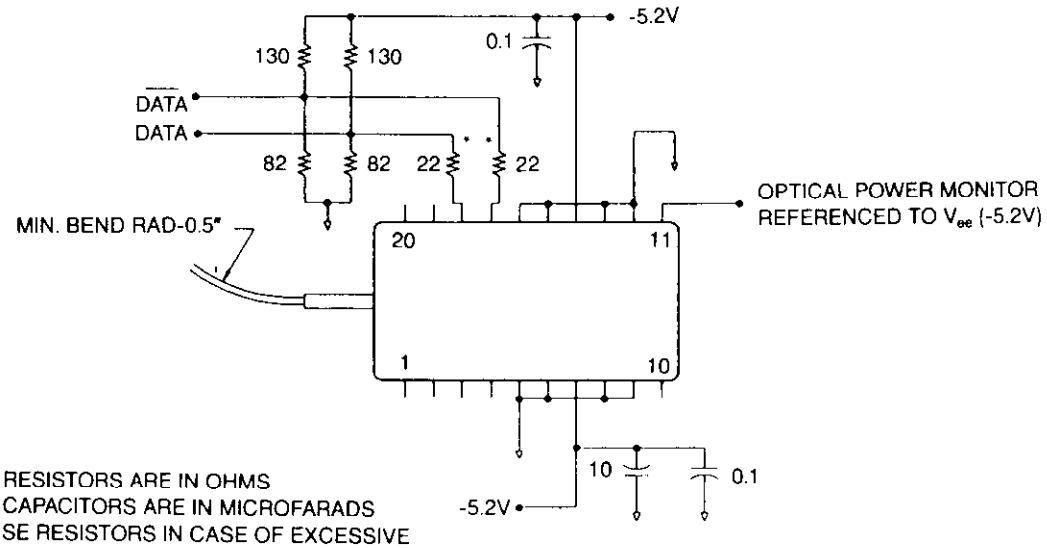

NOTES:
1. ALL RESISTORS ARE IN OHMS
2. ALL CAPACITORS ARE IN MICROFARADS
3. * - USE RESISTORS IN CASE OF EXCESSIVE PULSE RINGING

Consult the sales department for positive PECL circuit diagrams.

BLOCK DIAGRAM

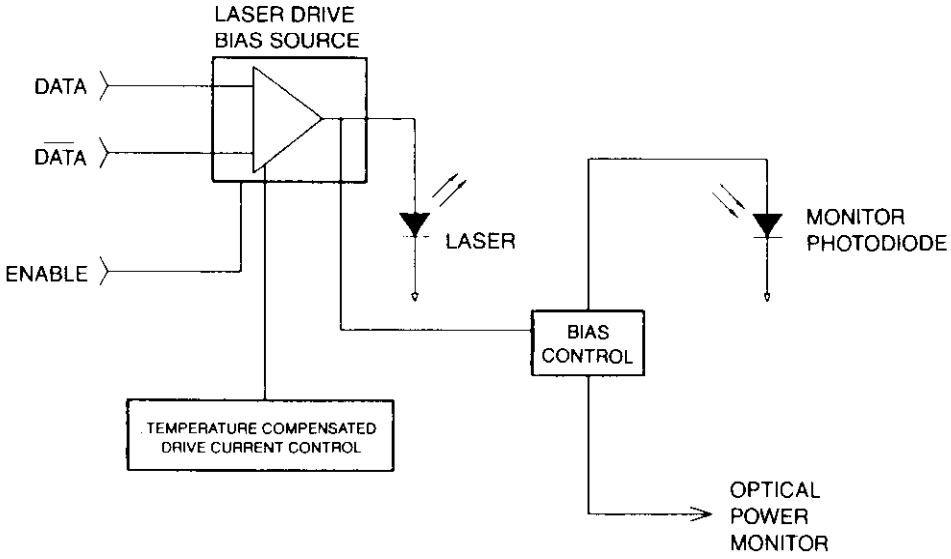

PACKAGE SCHEMATIC AND PINOUT

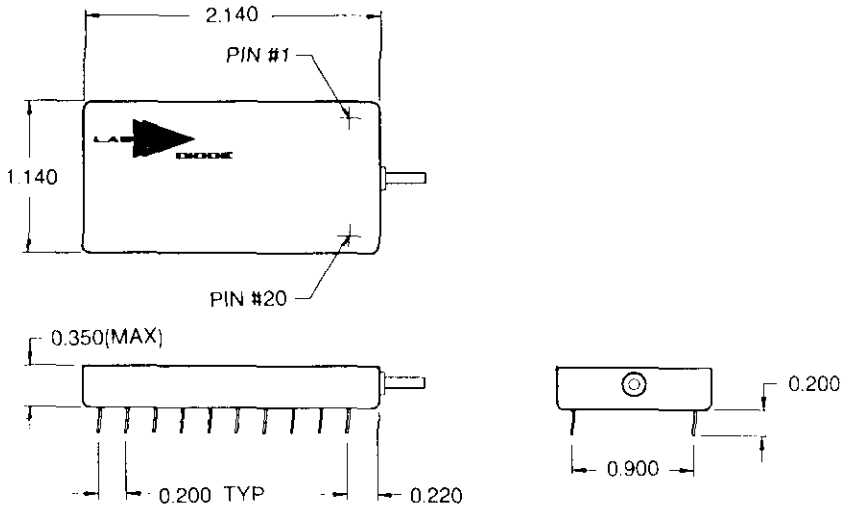

PIN#	DESCRIPTION
1,2,20	NO CONNECTION
3+, 4(-)	LASER BIAS MONITOR
5,8,9,12,13	V_{cc}
7,14	V_{ee}
10	NO CONNECTION
11	OPT PWR MONITOR
15	TX DISABLE
6,16	GROUND
17	$\overline{DATA}$
18	DATA
19	V_{bb}

Dimensions are in inches.

ORDERING INFORMATION

TL-1003-013	1.3μm TX, ECL, -13dBm (min, avg), FC/PC
TL-1003-010	1.3μm TX, ECL, -10dBm (min, avg), FC/PC
TL-1005-013	1.55μm TX, ECL, -13dBm (min, avg), FC/PC
TL-1005-010	1.55μm TX, ECL, -10dBm (min, avg), FC/PC
TL-1003-008	1.3μm TX, ECL, -8dBm (min, avg), FC/PC
TL-1005-008	1.55μm TX, ECL, -8dBm (min, avg), FC/PC

Consult the Sales Department for
- ☐ higher power options
- ☐ matching receivers
- ☐ alternate connectors
- ☐ higher data rates
- ☐ PECL interface
- ☐ special functions

Laser Safety - Indium Gallium Arsenide Phosphide lasers emit infrared radiation which is invisible to the human eye. When in use, safety precautions should be taken to avoid the possibility of eye damage.

Do not stare directly at the device or view an operating laser at close range. if viewing is required, the beam should only be observed by reflection from a matte surface utilizing an image convertor or by use of a suitable fluorscent screen.

LASER DIODE, INC., reserves the right to make changes at any time as deemed practical and/or necessary to improve the design and to supply the best possible product.

Information provided is believed at this time to be accurate and reliable. No responsibility is assumed for its use, nor for any infringements on the rights of others.

For further informtion on this product or others of LASER DIODE, INC., please call:

LASER DIODE

Lightwave Products Division 4 Olsen Avenue Edison, NJ 08820 908/249-7000 Fax 908/906-1559

LASERTRON

Lasers

Laser Module in Longhorn Package

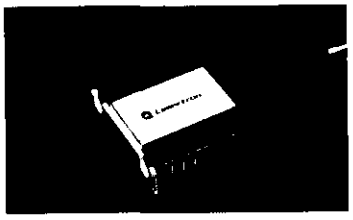

Laser Module in Butterfly Package

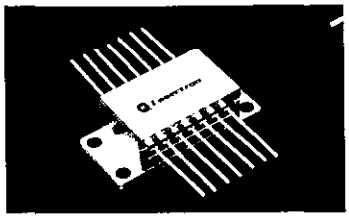

Microwave Laser

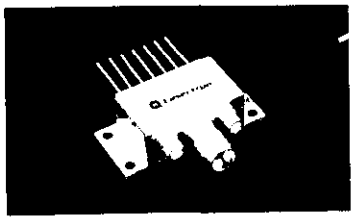

***Laser Module in* Receptacle Package**

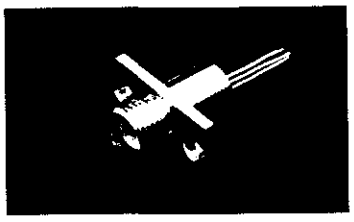

Laser Module in Cylindrical-Pigtailed Package

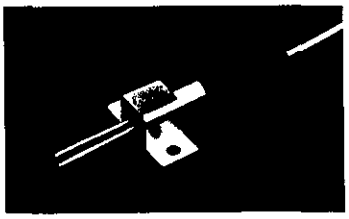

	Application			Specification					Configuration								Model Suffix				
Base Model	**Telecom/Digital**	**Microwave/RF**	**Analog/Video**	**Power** (mW)	**Wavelength** (nm)	**Threshold I** (mA)	**Slope Efficiency** (P/I, µW/mA)	**Monitor Detector Responsivity** (µA/µW)	**14-pin DIL Longhorn Package**	**14-pin Butterfly Package**	**Microwave Package**	**SM Receptacle Package**	**Cylindrical-Pigtailed Package**	**Uncooled**	**Single-Mode Fiber**	**Multimode Fiber**	**No Connector**	**FC/PC Connector**	**Biconic Connector**	**ST Connector**	**Description**
QLM3S700	■			2	1300	≤50	≥40	≥0.05		■					■		-002	-052	-062	-072	DFB Laser
QLM3S765-	■			1	1300	10-50	25-100	0.1-0.3		■					■		-002	-050	-051	-052	Fabry-Perot
QLM3S811-	■			0.13	1300	≤50	3.25-13	0.3-5	■					■	■		-002	-050	-051	-052	Fabry-Perot RWG
QLM3S810-	■			0.25	1300	≤40	6.25-25	1-4	■					■	■		-002	-050	-051	-052	Fabry-Perot RWG
QLM3S812-	■			0.5	1300	≤50	12.5-50	0.3-5	■					■	■		-002	-050	-051	-052	Fabry-Perot RWG
QLM3S813-	■			1	1300	≤40	25-100	0.1-0.6	■					■	■		-002	-050	-051	-052	Fabry-Perot RWG
QLM3S855-	■			0.25	1300	≤40	6.25-25	1-4	■						■		-002	-050	-051	-052	Fabry-Perot RWG
QLM3S860-	■		■	1	1300	≤40	25-100	0.15-0.45	■						■		-002	-050	-051	-052	Fabry-Perot RWG
QLM3S861-	■		■	2.5	1300	≤35	62.5-250	0.10-0.45	■						■		-002	-050	-051	-052	Fabry-Perot RWG
QLM3S862-	■		■	1.6	1300	≤40	40-160	0.125-0.5	■						■		-002	-050	-051	-052	Fabry-Perot RWG
QLM3S882-			■	1.6	1300	5-40	40-160	0.125-0.5	■						■		-005				Fabry-Perot
QLM3S900-		■		2	1300	25-40	20 min	0.1-1			■				■		-001	-051*			Bandwidth to 7 GHz **
QLM3S900-		■		2	1300	25-40	20 min	0.1-1			■				■		-002	-052*			Bandwidth to 10 GHz **
QLM3S900-		■		2	*1300*	*25-40*	*20 min*	*0.1-1*			■				■		-003	-053*			Bandwidth to 12 GHz **
QLM3S900-		■		2	1300	25-40	20 min	0.1-1			■				■		-004	-054*			Bandwidth to 15 GHz **
QLM3S900-		■		2	1300	25-40	20 min	0.1-1			■				■		-005	-055*			Bandwidth to 18 GHz **
QLM3M870-	■			2.5	1300	20-40	62.5-250	0.08-0.3	■							■	-002	-050	-051	-052	Fabry-Perot RWG
QLM5S790-	■			1	1550	5-50	20-100	0.05-0.5		■					■		-002	-050	-051	-052	DFB laser chip
QLM5S876-	■			0.5	1550	20-50	10-50	0.2-1	■						■		-002	-050	-051	-052	Fabry-Perot RWG
QLM5S890-	■			1	1550	5-50	20-100	0.05-0.5	■						■		-002	-050	-051	-052	DFB laser chip
QLM9S450-	■			50	980	15-25	—	0.025-20	■						■		-005				EDFA pump laser
QLM9S450-	■			60	980	15-25	—	0.025-20	■						■		-006				EDFA pump laser
QLM9S450-	■			70	980	15-25	—	0.025-20	■						■		-007				EDFA pump laser
QLM9S470-	■			50	980	15-25	—	0.025-20		■					■		-005				EDFA pump laser
QLM9S470-	■			60	980	15-25	—	0.025-20		■					■		-006				EDFA pump laser
QLM9S470-	■			70	980	15-25	—	0.025-20		■					■		-007				EDFA pump laser
QLC3S300-	■			0.2	1300	≤30	5-20	1-5					■		■		-002	-052	-062	-072	Fabry-Perot
QLR3S350-	■			0.2	1300	≤30	5-20	1-5				■			■		-002	*(FC Receptacle Only)*			Fabry-Perot

**Super FC/PC connector*
***One year warranty*

RWG=Ridge Waveguide
DFB=Distributed Feedback

Preliminary Product Specifications:
1550 nm Isolated DFB lasers for high-speed telecom applications, 2 mW rated output power, 1300 or 1550 nm wavelength

All models except QLM3S811, 810, 812 & 813:
Operating Temperature Range: -20 to +65°C
Storage Temperature Range: -40 to +70°C

Models QLM3S811, 810, 812 & 813 only:
Operating Temperature Range: 0 to +65°C
Storage Temperature Range: -40 to +70°C

LASERTRON

Package Diagrams & Pin Connections

SOURCES

14-pin DIL Longhorn

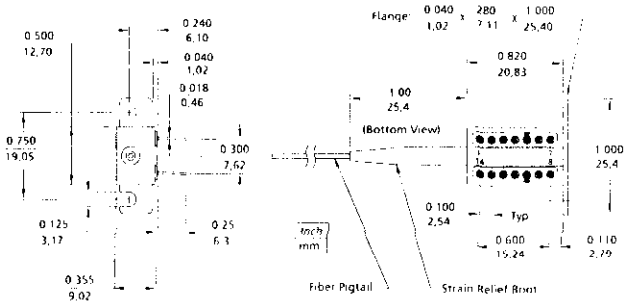

Pin #	Uncooled, 14-pin DIL Laser (Longhorn)	Pin #	Cooled, 14-pin DIL Laser (Longhorn)
1	NC	1	Cooler (+)
2	NC	2	NC
3	NC	3	NC
4	NC	4	NC
5	Case Ground	5	Case Ground
6	NC	6	NC
7	Monitor (+)	7	Monitor (+)
8	Monitor (-)	8	Monitor (-)
9	Laser (-)	9	Laser (-)
10	Laser (+), Case Ground	10	Laser (+), Case Ground
11	NC	11	Thermistor
12	NC	12	Thermistor
13	NC	13	NC
14	NC	14	Cooler (-)

Pin #	Uncooled, 14-pin DIL LED (Longhorn)	Pin #	Cooled, 14-pin DIL LED (Longhorn)
1	NC	1	Cooler (+)
2	NC	2	NC
3	NC	3	NC
4	NC	4	NC
5	Case Ground	5	Case Ground
6	NC	6	NC
7	NC	7	NC
8	NC	8	NC
9	LED (-)	9	LED (-)
10	LED (+), Case Ground	10	LED (+), Case Ground
11	NC	11	Thermistor
12	NC	12	Thermistor
13	NC	13	NC
14	NC	14	Cooler (-)

14-pin Butterfly

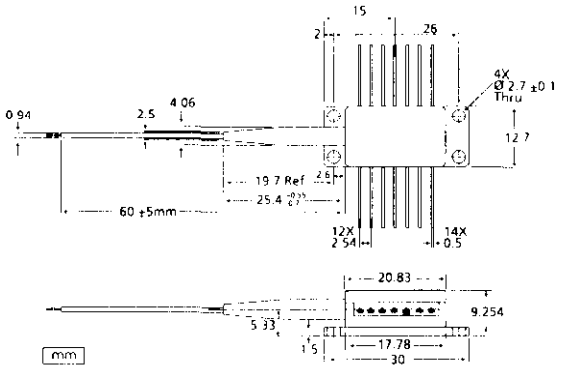

Pin #	14-pin Butterfly Laser	Pin #	14-pin Butterfly LED
1	Cooler (+)	1	Cooler (+)
2	Thermistor	2	Thermistor
3	Monitor (-)	3	NC
4	Monitor (+)	4	NC
5	Thermistor, Case Ground	5	Thermistor, Case Ground
6	NC	6	NC
7	NC	7	NC
8	NC	8	NC
9	NC	9	NC
10	Laser (+), Case Ground	10	LED (+), Case Ground
11	Laser (-)	11	LED (-), Case Ground
12	NC	12	NC
13	Case Ground	13	Case Ground
14	Cooler (-)	14	Cooler (-)

Coaxial Lasers

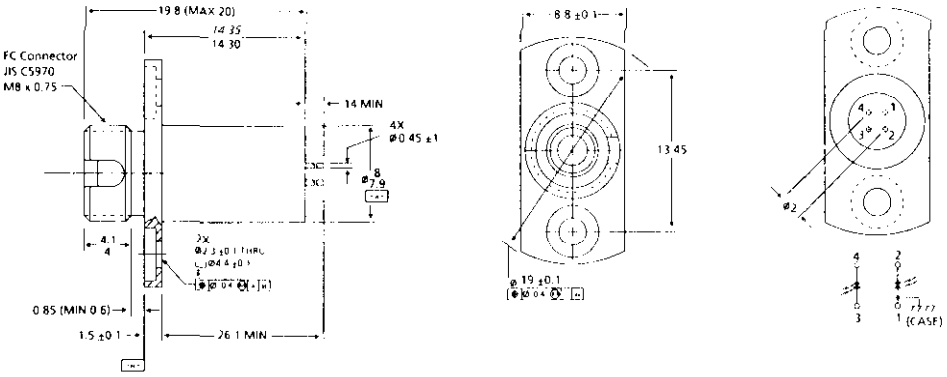

Pin #	Coaxial Lasers
1	Laser Anode, Case Ground
2	Laser Cathode (-)
3	Monitor Cathode (+)
4	Monitor Anode (-)

QLM3S700

1300 nm Isolated DFB Laser

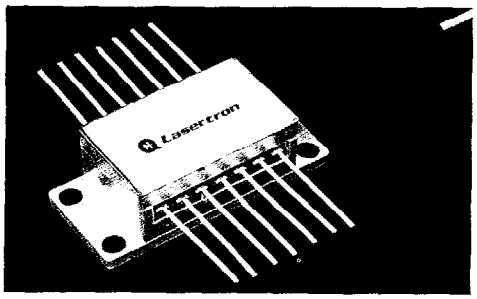

- *Very high-speed digital transmission applications*
- *2 mW rated output power*
- *1300 nm wavelength*
- *Integrated optical isolator*
- *Cooled 14-pin "butterfly" package, single-mode fiber*

Description

The QLM3S700 is a DFB laser module with integrated optical isolator for very high-speed digital transmission applications, such as 2.5 Gb/s SONET OC-48/SDH STM-16 systems. The cooled 14-pin "butterfly" package is configured such that the laser device, optical isolator, coupling optics, and single-mode fiber pigtail are all mounted on the same submount to allow stable performance over temperature.

Specifications

(T_{laser} = 25°C, T_{case} = 0 to 65°C, except as noted)

Rated Output Power, P (μW)		2000	
	Min	**Typ**	**Max**
Laser Spectral Characteristics			
Wavelength (nm, mean, 25°C)	1280		1335
Spectral width (nm, -20 dB)			1
Side mode suppression ratio (dB)	30		
Optical isolation (dB)	25		
Laser Drive Characteristics			
Threshold current (mA)			50
Output power at threshold (μW)			200
Modulation current (at P, mA)			50
Slope efficiency (P/I, μW/mA)	40		
Input impedance (Ohms)		25	
Frequency response (GHz, -3 dB)	1.8		
Monitor Photodiode Characteristics			
Monitor detector responsivity (μA/μW)	0.05		
Monitor detector dark I (μA)			0.2
Tracking error (dB, relative to 25°C)	-1		1
Thermoelectric Cooler Characteristics			
Current (A, ΔT = 40°C)			1
Voltage (V, ΔT = 40°C)			2

Pin Connections

1 Thermistor
2 Thermistor
3 Laser Cathode, DC Bias (-)
4 Monitor Anode (-)
5 Monitor Cathode (+)
6 Cooler (+)
7 Cooler (-)
8 Case Ground, Laser Anode
9 Case Ground, Laser Anode
10 Case Ground, Laser Anode
11 Case Ground, Laser Anode
12 Laser Cathode, RF Modulation
13 Case Ground, Laser Anode
14 Case Ground, Laser Anode

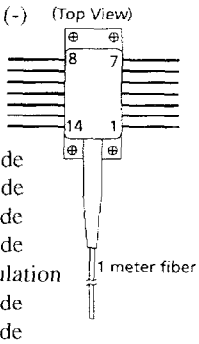

Ordering Information

Base Model	Suffix: No Connector	FC/PC	Biconic	ST
QLM3S700	-002	-052	-062	-072

QLM3S81-Series

Uncooled Lasers

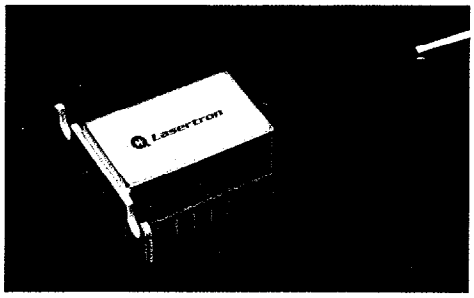

- *Telecom access, junction and trunk applications*
- *Rated output powers from 130 µW to 1 mW*
- *High-reliability ridge waveguide laser chip*
- *1300 nm wavelength*
- *Industry-standard package, single-mode fiber*
- *No cooler or temperature control required*

Description

The QLM3S81-series laser modules are low-power, uncooled, 1300 nm GaInAsP devices packaged in industry-standard 14-pin dual-in-line (DIL) flanged packages. The single-mode fiber pigtail has a 0.9 mm Hytrel coating. Pigtail is available terminated with optional FC/PC, Biconic or ST connector. The QLM3S81-series is characterized over the temperature range 0 to 65°C. Four standard models address different performance requirements.

The QLM3S81-series laser modules are manufactured using proven production techniques and materials, including laser-welded fiber attachment, and a hermetically-sealed, strain-relief fiber assembly package. The conventional and proven ridge waveguide (RWG) laser chip was chosen to meet aggressive performance and reliability objectives of coolerless design.

Ordering Information

	Suffix				
Base Model	**No Connector**	**FC/PC**	**Biconic**	**ST**	
QLM3S811	-002	-050	-051	-052	(130 µW version)
QLM3S810	-002	-050	-051	-052	(250 µW version)
QLM3S812	-002	-050	-051	-052	(500 µW version)
QLM3S813	-002	-050	-051	-052	(1 mW version)

Pin Connections

1	NC	8	Monitor Anode (-)
2	NC	9	Laser Cathode (-)
3	NC	10	Laser Anode (+), Case Ground
4	NC	11	NC
5	Case Ground	12	NC
6	NC	13	NC
7	Monitor Cathode (+)	14	NC

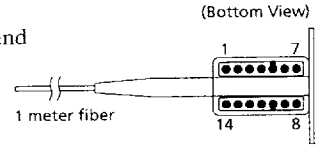

Specifications

(T_{laser} = T_{case} = 0 to 65°C, except as noted)

	QLM3S811	QLM3S810	QLM3S812	QLM3S813
Rated Output Power, P (μW)	130	250	500	1000
Laser Spectral Characteristics				
Wavelength (nm, mean, 25°C)	1283 to 1320	1283 to 1320	1283 to 1320	1280 to 1320
Wavelength (nm, mean, 0 to 65°C)	1270 to 1340	1270 to 1340	1270 to 1340	1267 to 1340
Spectral width (nm, RMS)	≤3	≤3	≤3	≤3
Spectral width (nm, FWHM)	≤6	≤6	≤6	≤6
Spectral shift (nm/°C)	≤0.5	≤0.5	≤0.5	≤0.5
Laser Drive Characteristics				
Threshold I (mA at 25°C)	≤50	≤40	≤50	≤40
Threshold I (mA at 0 to 65°C)	≤100	≤90	≤100	≤90
Threshold change with T (%/°C)	≤2.5	≤2	≤2.5	≤2.5
Output power at threshold (μW)	≤8	≤8	≤25	≤50
Modulation current (at P, mA at 25°C)	10 to 40	10 to 40	10 to 40	10 to 40
Slope efficiency (P/I, μW/mA at 25°C)	3.25 to 13	6.25 to 25	12.5 to 50	25 to 100
Slope efficiency change: (+dB, 25 to 0°C)	≤1.5	≤1	≤1.5	≤1.5
(-dB, 25 to 65°C)	≤3	≤2.5	≤3	≤2.5
Slope efficiency change (-%/°C, 25 to 65°C)	≤1.7	≤1.4	≤1.7	≤1.4
Forward voltage at P (V)	≤1.5	≤1.5	≤1.5	≤1.5
Series resistance (Ohms)	≤8	≤8	≤8	≤8
Optical rise/falltime (nsec, 10-90%)	≤1	≤1	≤1	≤1
Analog bandwidth (MHz, -3 dB response)	≥800	≥800	≥800	≥800
Monitor Photodiode Characteristics				
Monitor detector responsivity (μA/μW)	0.3 to 5	1 to 4	0.3 to 5	0.1 to 0.6
Monitor detector dark current (μA at -5 V)	≤0.25	≤0.25	≤0.25	≤0.15
Tracking error (dB, relative to 25°C)	≤1	≤0.6	≤1	≤1

Absolute Maximum Ratings

Laser Element (T=25°C)	
Fiber-coupled optical power (mW)	1
Forward laser current (mA)	150
Reverse laser voltage (V)	2
Reverse laser current (mA)	2
Monitor Detector (T=25°C)	
Reverse photodiode photocurrent (mA)	1
Reverse photodiode bias voltage (V)	10
Forward photodiode current (mA)	2
Package	
Storage temperature (°C)	-40 to 70
Operating temperature (°C)	0 to 65
Lead soldering temperature (°C)	260
Lead soldering duration (sec)	10
Fiber yield strength (N)	10
Fiber bend radius (mm, min.)	30

QLM3S810-002: TYPICAL CHARACTERISTICS

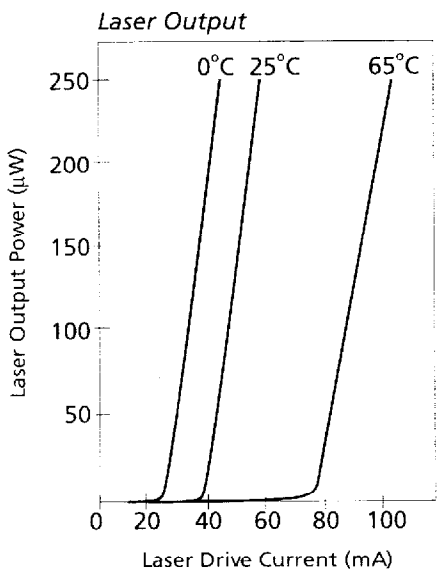

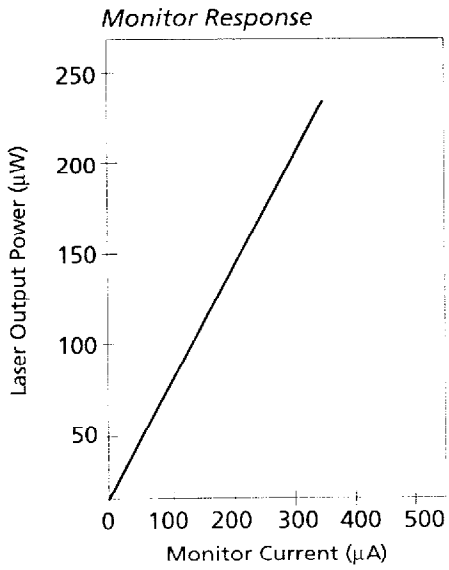

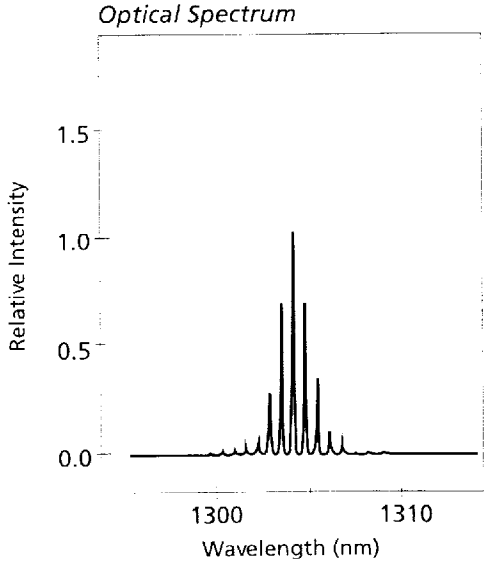

- *Analog/CATV performance*
- *Fabry-Perot laser chip*
- *1300 nm wavelength*
- *Cooled 14-pin DIL package, single-mode fiber*

QLM3S860 & QLM3S882

Cooled Analog Lasers

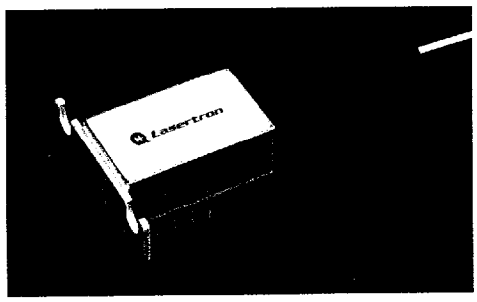

Description

Lasers incorporating standard Fabry-Perot devices can be constructed and screened to give good analog linearity performance. These modules represent an alternative to expensive DFB lasers for use in applications such as transmission of a small number of analog video channels. Typical applications in closed circuit television and return channels for CATV systems require transmission of up to 8 high-quality video channels over distances of 12 kilometers. The laser chip is packaged in an industry-standard 14-pin longhorn DIL package with a thermoelectric cooler and thermistor for temperature stabilization and a GaInAs monitor detector for power stabilization. The lasers are coupled to single-mode fiber pigtail using Lasertron's unique laser-welded fiber attachment process.

Specifications

(T_{laser} = 25°C, T_{case} = -20 to 65°C, except as noted)

	QLM3S860		QLM3S882	
Rated Output Power, P (μW)	1000		1600	
	Min	**Max**	**Min**	**Max**
Laser Spectral Characteristics*				
Wavelength (nm, mean)	1285	1325	1280	1340
Spectral width (nm, RMS)		1.9		1.9
Spectral width (nm, FWHM)		4		5
Laser Drive Characteristics				
Threshold I (mA)		40		40
Output power at threshold (μW)		35		50
Slope efficiency (P/I, μW/mA)	25	100	40	160
Forward voltage at rated power (V)		1.5		1.5
Series resistance (Ohms)		8		8
Monitor Photodiode Characteristics				
Monitor detector responsivity (μA/μW)	0.15	0.45	0.125	0.5
Monitor detector dark I (μA at -5 V)		0.15		0.15
Tracking error (dB, relative to 25°C)	-0.5	0.5	-1	1
Laser Temperature Range				
Operating temperature range (°C)	-20	65	-20	65
Laser element operating temperature (°C)	25	25	25	25
Storage temperature range (°C)	-40	70	-40	70
Thermoelectric Cooler Characteristics				
Current (A)		0.8		0.8
Voltage (V)		1.5		1.5
Power (W)		1.2		1.2
Thermistor Characteristics				
T_{laser} at R = 10K Ohms (°C)	24.5	25.5	24.5	25.5
R at T_{laser} = 25°C (K Ohms)	9.8	10.2	9.8	10.2
Analog Characteristics				
RIN (dB/Hz, measured at 350 MHz, Bias = 0.5 mW)		-130		
2nd order intermodulation, (dBc)**	55			
3rd order intermodulation (dBc)**	60			
3rd order intercept (dBm)**	30			
Channel capacity (50-140 MHz)				8
Optical signal level per channel (μW)			80	
CNR (dBc, 4.2 MHz noise BW)			50	
CTB (dBc)			55	
CSO (dBc)			55	
Cross modulation distortion (dBc)			55	
Bias current (mA, P_{out} = P_{bias})				150
RF drive level per channel (dBmV)				53

**Spectral Measurement Conditions:* *Average Optical Power (μW) 800*, *Modulation Frequency (MHz) 300*, *Temperature (°C) 25*

***Two-tone measurements, F_1=350 MHz, F_2=353 MHz, P_o=0.75 mW, Modulation depth=30%, No fiber loss.*

Absolute Maximum Ratings

Laser Element (T = 25°C)	
Fiber-coupled optical power (mW)	5
Forward current (mA)	150
Reverse voltage (V)	2
Reverse current (mA)	2
Monitor Detector (T = 25°C)	
Reverse photocurrent (mA)	1
Reverse voltage (V)	10
Forward current (mA)	2
Thermistor	
Voltage (V)	5
Current (mA)	2
Thermoelectric Cooler	
Current (A)	1.5
Voltage (V)	2
Operating temperature (°C)	-40 to 70
Package	
Storage temperature (°C)	-40 to 70
Operating temperature (°C)	-40 to 70
Lead soldering temperature (°C)	260
Lead soldering duration (sec)	10
Fiber yield strength (N)	10
Fiber bend radius (mm, min.)	30

Pin Connections

(Bottom View)

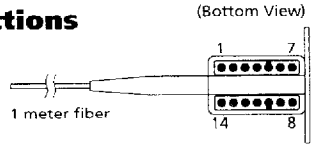

1 Cooler (+)
2 NC
3 NC
4 NC
5 Case Ground
6 NC
7 Monitor Cathode (+)
8 Monitor Anode (-)
9 Laser Cathode (-)
10 Laser Anode (+), Case Ground
11 Thermistor
12 Thermistor
13 NC
14 Cooler (-)

Ordering Information

QLM3S860-005	1 mW Analog Laser
QLM3S882-005	1.6 mW Analog Laser

These laser modules may be screened to customer-specific requirements.

QLM5S890

1 mW 1550 DFB Laser

- *Telecom trunk applications*
- *Gigabit components for telecom*
- *1 mW rated output power*
- *1550 nm wavelength*
- *DFB laser chip*
- *Cooled 14-pin DIL package, single-mode fiber*

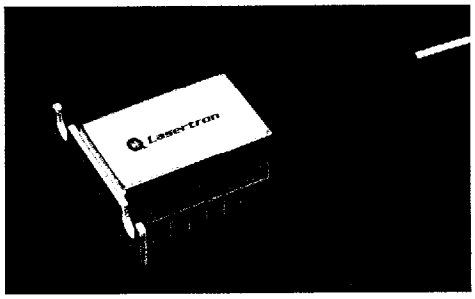

Description

The DFB laser chip featured in the QLM5S890 laser module operates at 1550 nm with a rated output power of 1 mW. This laser can be used for telecom trunk applications and as a gigabit component for telecom applications. The industry-standard 14-pin DIL package includes a thermoelectric cooler and single-mode fiber pigtail. Pigtail is available terminated with optional FC/PC, Biconic or ST connector.

Specifications

(T_{laser} = 25°C, T_{case} = -20 to 65°C, except as noted)

Rated Output Power, P (µW)	1000	
	Min	**Max**
Laser Spectral Characteristics*		
Wavelength (nm, mean)	1500	1560
Spectral width (nm, FWHM)		0.1
Side mode suppression ratio (dB)	30	
Laser Drive Characteristics		
Threshold I (mA)	5	50
Output power at threshold (µW)		35
Modulation current (at P, mA)	10	50
Slope efficiency (P/I, µW/mA)	20	100
Forward voltage at rated power (V)		1.8
Series resistance (Ohms)		10
Optical rise/falltime (nsec, 10-90%)		0.3
Analog bandwidth (MHz, -3 dB response)	800	
Monitor Photodiode Characteristics		
Monitor detector responsivity (µA/µW)	0.05	0.5
Monitor detector dark I (µA at -5 V)		0.15
Tracking error (dB, T_{laser} = 25°C, T_{case} = 0 to 65°C, relative to 25°C)	-0.5	0.5
Laser Temperature Range		
Operating temperature range (°C)	-20	65
Laser element operating temperature (°C)	25	25
Storage temperature range (°C)	-40	70
Thermoelectric Cooler Characteristics		
Current (A)		0.8
Voltage (V)		1.5
Power (W)		1.2
Thermistor Characteristics		
T_{laser} at R = 10K Ohms (°C)	24.5	25.5
R at T_{laser} = 25°C (K Ohms)	9.8	10.2

**Spectral Measurement Conditions:* *Average Optical Power (µW)* *500*; *Modulation Frequency (MHz)* *300*

Absolute Maximum Ratings

Laser Element (T = 25°C)	
Fiber-coupled optical power (mW)	5
Forward current (mA)	150
Reverse voltage (V)	2
Reverse current (mA)	2
Monitor Detector (T = 25°C)	
Reverse photocurrent (mA)	1
Reverse voltage (V)	10
Forward current (mA)	2
Thermistor	
Voltage (V)	5
Current (mA)	2
Thermoelectric Cooler	
Current (A)	1.5
Voltage (V)	2
Operating temperature (°C)	-40 to 70
Package	
Storage temperature (°C)	-40 to 70
Operating temperature (°C)	-40 to 70
Lead soldering temperature (°C)	260
Lead soldering duration (sec)	10
Fiber yield strength (N)	10
Fiber bend radius (mm, min.)	30

Pin Connections

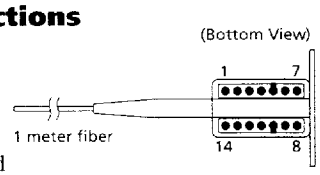

1 Cooler (+)
2 NC
3 NC
4 NC
5 Case Ground
6 NC
7 Monitor Cathode (+)
8 Monitor Anode (-)
9 Laser Cathode (-)
10 Laser Anode (+), Case Ground
11 Thermistor
12 Thermistor
13 NC
14 Cooler (-)

Ordering Information

Base Model	Suffix: No Connector	FC/PC	Biconic	ST
QLM5S890	-002	-050	-051	-052

QLD3S502

5 & 8 μW Cooled LED

- *Telecom access and junction applications*
- *5 and 8 μW rated output powers available*
- *1300 nm wavelength*
- *Cooled 14-pin DIL package, single-mode fiber*

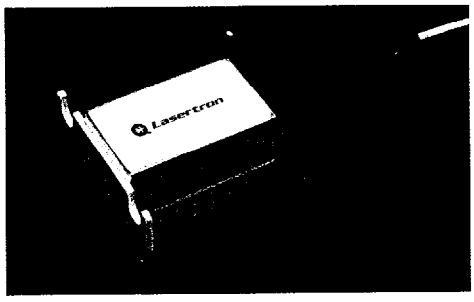

LEDs

Description

The QLD3S502 light-emitting diode is an edge-emitting device available at two power levels, 5 and 8 μW. Both versions operate at a wavelength of 1300 nm and are packaged in an industry-standard 14-pin DIL package complete with cooler and thermistor. Single-mode fiber pigtail is standard. Pigtail is available terminated with optional FC/PC, Biconic or ST connector.

Specifications

(T_{LED} = T_{case} = -20 to 60°C, except as noted)

QLD3S502	-001,-050, -051,-052			-004,-053, -054,-055		
	Min	**Typ**	**Max**	**Min**	**Typ**	**Max**
LED Peak Optical Power						
Rated output power (μW, 25°C, 150 mA)	5			8		
LED Spectral Characteristics*						
Wavelength (nm, mean)	1270		1330	1270		1330
Spectral width (nm, FWHM)			90			90
Spectral shift (nm/°C)			0.7			0.7
LED Drive Characteristics						
Drive current (mA)		150			150	
Slope efficiency (P/I, μW/mA at 25°C)	0.033			0.053		
Forward voltage at rated power (V)			1.8			1.8
Series resistance (Ohms)			10			10
Optical rise/falltime (nsec, 10-90%)			4			4
Thermoelectric Cooler Characteristics						
Current (A at 65°C)			0.9			0.9
Voltage (V at 65°C)			1.6			1.6
Power (W at 65°C)			1.5			1.5
Thermistor Characteristics (Typical temperature coefficient, %/°C: -4.4)						
LED temperature at R = 10K Ohms	24.5		25.5	24.5		25.5
Thermistor resistance at 25°C (K Ohms)	9.8		10.2	9.8		10.2
Reliability						
MTTF (years at 25°C)	50			50		
MTTF (years at 50°C)	25			25		
TT10%F (years at 25°C)	10			10		
LED Temperature Range						
Operating temperature range (°C)	-20		65	-20		65
Storage temperature range (°C)	-40		70	-40		70

**Spectral Measurement Conditions:*

Temperature (°C)	*25*
Drive Current (mA)	*150*
Modulation	*CW*

Pin Connections

(Bottom View)

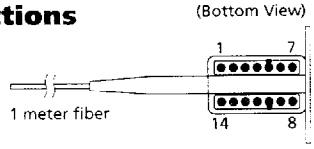

1 Cooler (+)
2 NC
3 NC
4 NC
5 Case Ground
6 NC
7 NC
8 NC
9 LED Cathode (-)
10 LED Anode (+), Case Ground
11 Thermistor
12 Thermistor
13 NC
14 Cooler (-)

Ordering Information

Base Model	Suffix: No Connector	FC/PC	Biconic	ST	
QLD3S502	-001	-050	-051	-052	(5 μW version)
QLD3S502	-004	-053	-054	-055	(8 μW version)

Cooler/Heater Circuitry

The following circuit senses the temperature of the laser submount through the use of an internal NTC 10K Ohm thermistor with a temperature coefficient of -4.4%/°C. As the temperature inside the laser changes, the change in thermistor resistance is translated into the supply of current to the thermoelectric cooler.

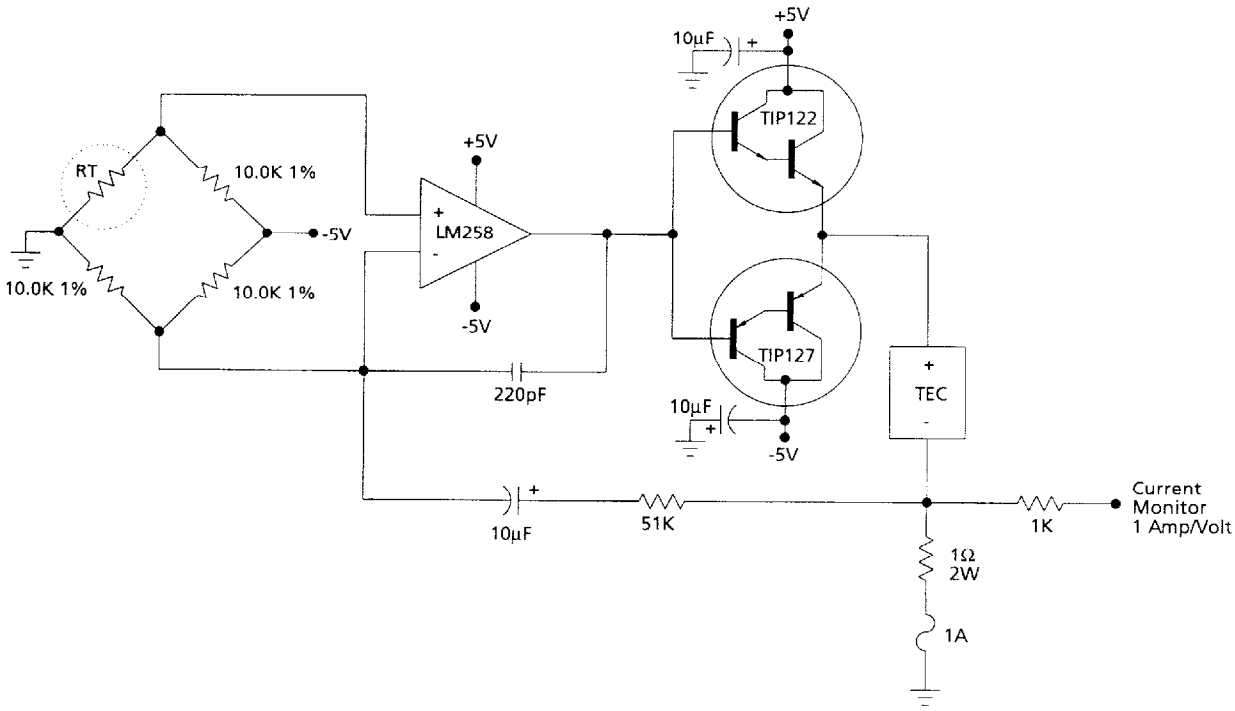

Laser Power Stabilization Circuitry

Being a threshold device, a laser requires a DC current input to bias the laser at its proper operating point. This is in addition to the data signal input. The optimum DC operating point varies from device to device, as well as with temperature and over life. Using the back facet monitor detector as a reference, the power stabilization circuit provides the proper amount of DC current to the laser to ensure a constant, fiber-coupled, average power output. This is known as single loop control.

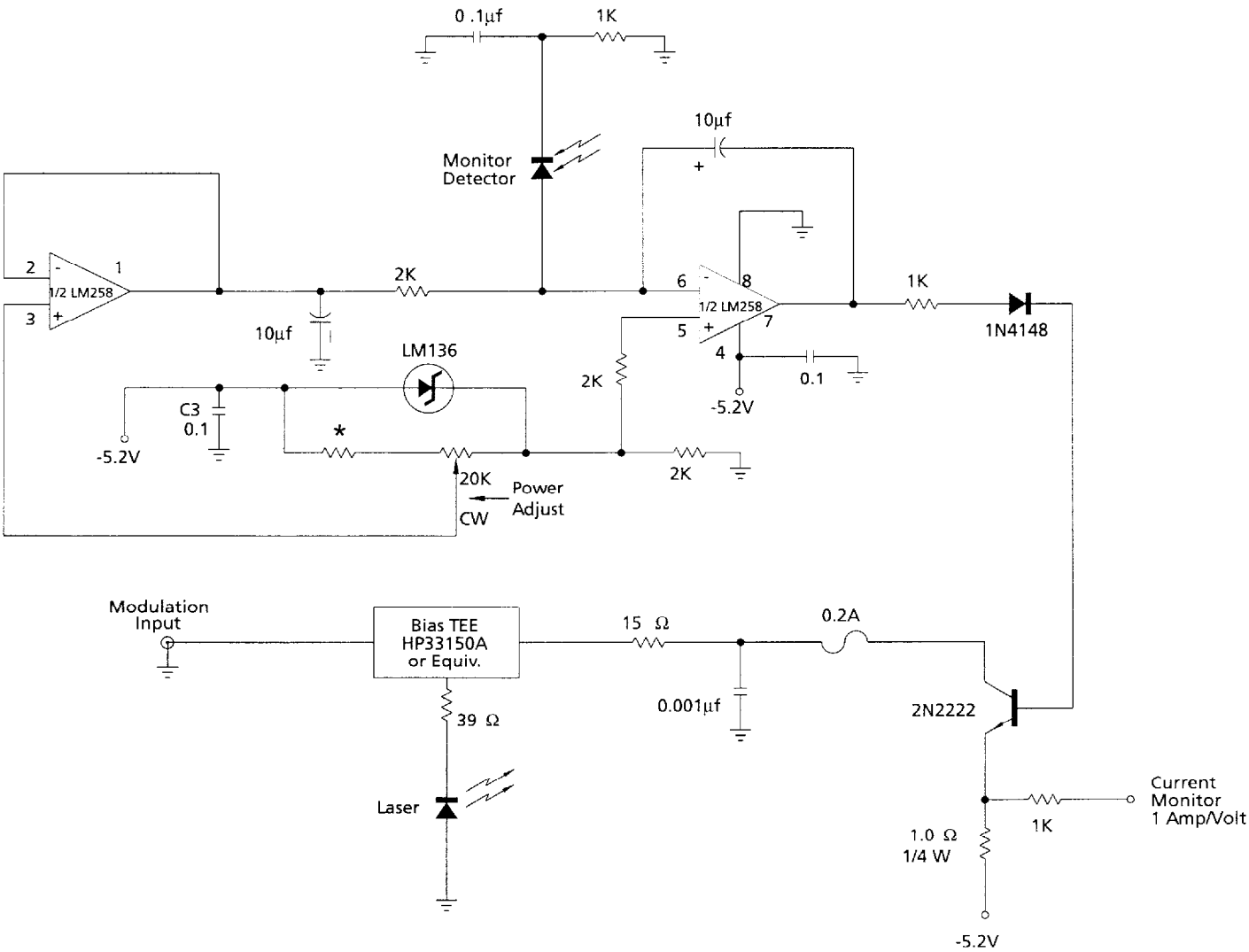

*Effectively limits maximum optical power output by limiting the maximum attainable monitor detector current.