EVALUATION OF DESIGNS FOR SEA BASED DUAL BAND TRANSPORTABLE RADAR SHIP MODIFICATIONS

Roll Stabilization and Speed Assessment

Prepared for:

Mr. Orazio DiMarca
Program Manager
USAF ESC/TNE
HANSCOM AFB, MA 01731

By:

Prof. Charles N. Calvano
Naval Postgraduate School
Department of Mechanical Engineering
Monterey, CA 93943
Phone: (408) 656{2364, Fax: (408) 656{2238, **calvano@me.nps.navy.mil**

and

Prof. Fotis A. Papoulias
Naval Postgraduate School
Department of Mechanical Engineering
Monterey, CA 93943
Phone: (408) 656{3381, Fax: (408) 656{2238, **fotis@me.nps.navy.mil**

Reporting Period: April 96 | June 96

EXECUTIVE SUMMARY

Problem Statement

This report was prepared for the United States Air Force, Electronic Systems Center under MIPR number FY7620{96{TN139. It presents a preliminary feasibility study of various roll stabilization systems for the T{AGOS 3 and 4 class ships.

Recommendations

Based on this preliminary study, the following action items are recommended:

1. Out¯t the ship with *bilge keels* subject to:
   (a) Model tests and CFD studies to minimize added drag in steady forward motions.
   (b) Seakeeping studies to maximize window of operations in all sea states and headings.
   (c) Nonlinear dynamics studies to avoid parametric excitation of roll in head/following seas.
2. Design passive U{tube *roll tanks* subject to:
   (a) Finalization of bilge keel size and location. This will provide a baseline stabilized system.
   (b) Ship design studies that would assess the impact of roll tanks on ship internal volumes as well as the possible utilization of the roll tanks for storage.
3. Investigate the promising potential of *rudder roll stabilization* (RRS) subject to:
   (a) Detailed control algorithm studies to guarantee performance and robustness in a variety of operating conditions.
   (b) Based on these studies, determine whether the existing steering engines and other COTS elements could provide the required bandwidth for the RRS system.
4. Conduct a preliminary propeller optimization study. Optimize the propeller for maximum ef¯ciency and calculate the required diameter, rpm, and pitch. Diagram of the current propeller characteristics will be required in order to initiate this study.

Contents

1 INTRODUCTION 5

1.1 Background : : :

Nomenclature and Abbreviations

CFD	Computational Fluid Dynamics
COTS	Commercial O®{The{Shelf
NPS	Naval Postgraduate School
RRS	Rudder Roll Stabilization

1 INTRODUCTION

1.1 Background

This report was prepared for the United States Air Force, Electronic Systems Center under MIPR number FY7620{96{TN139. It presents a preliminary feasibility study of various roll stabilization systems for the T{AGOS 3 and 4 class ships.

Originally these ships were designed for surveillance and ASW operations. In the current study the intended application is as sea based radar platforms. This means that \quiet" operation is not necessarily of the same weight as before, instead emphasis is shifting towards improved seakeeping qualities. This makes roll stabilization an important issue in the modi¯cations of the ships. Furthermore, we need to investigate whether a di®erent propeller could increase the speed of the ships. This speed increase, if any, may a®ect the choice of roll stabilization systems to be used.

1.2 Outline

Three main systems were considered for roll stabilization of the above ships, namely, active ¯n stabilizers (Section 2), passive roll tanks (Section 3), and bilge keels (Section 4). For each of these systems we provide a brief theoretical background outlining the principles of their operation, followed by a list of advantages and disadvantages for this case study. Finally, speci¯c recommendations for each system are provided. The propeller design problem is described in Section 5 while our recommendations and proposed methods are summarized in Section 6.

2 FIN STABILIZERS

2.1 Theoretical Background

Active ¯n stabilizers produce a controlled roll moment of appropriate phase and magnitude to counteract the external heel moment. Since the force on the ¯n varies in proportion to the square of the speed, ¯n systems are more e±cient at high speeds. Generally speaking, a ¯n system cannot be expected to be very e®ective at speeds below about 10 knots [Rawson & Tupper (1984)]. As shown in Figure 1, at speeds below 10 knots very little stabilizing moment is available. Furthermore, because of the load on the activating mechanism or on the ¯n pivot, the maximum angular displacement for an active ¯n is limited for a particular speed. There exist certain speeds, therefore, where full utilization of the system is not possible and its performance may be degraded.

In order to obtain the maximum possible stabilizing moments obtainable from ¯ns of various shapes and locations at various angles of attack, usually experimental investigations are necessary. These include establishment of

- lift forces in order to obtain the total lift force, stabilizing moment and detailed cavitation characteristics, and
- centers of pressure that are required to predict the necessary torque to drive the ¯ns.

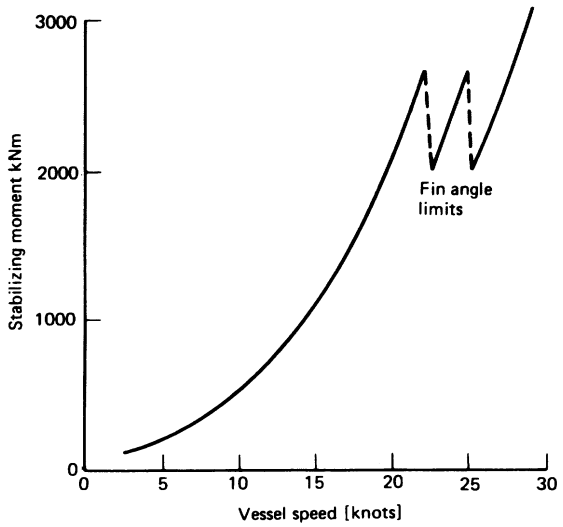

Figure 1: Typical active ¯n stabilizer characteristics

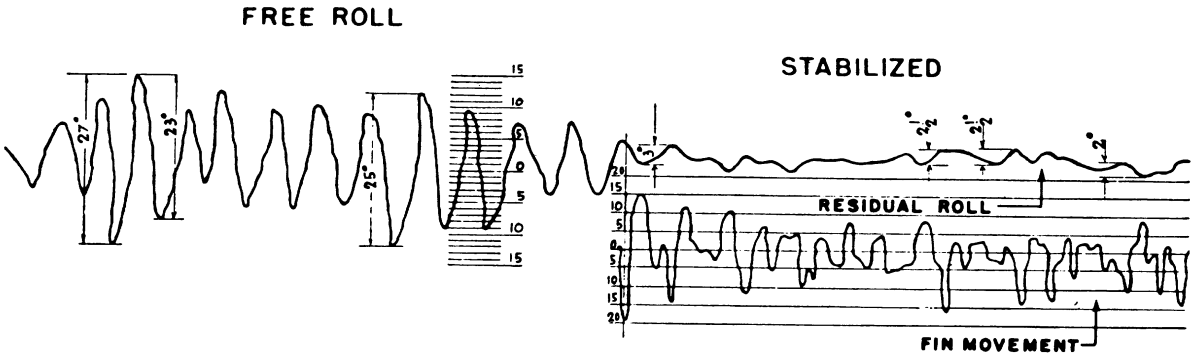

Figure 2: Actual rolling record with and without ¯ns operating

The main requirements for a stabilzing ¯n are as follows [Bhattacharyya (1978)]:

1. High maximum lift force.
2. Low drag.
3. Low torque.
4. Retractability.
5. Adequate strength.
6. Resistance to cavitation.

Activated ¯ns are the most e®ective of all single stabilizing devices, see Figure 2 [Gillmer & Johnson (1982)]. Although the controlling equipment and machinery may cost signi¯cantly to install, this large expenditure may be justi¯ed by the greater stabilization e®ect.

2.2 Advantages

The primary advantages of activated ¯ns for this study are as follows:

1. They o®er the highest possible roll reduction with no reduction in static stability characteristics.
2. They are used in ships of di®erent sizes.
3. They in°ict very small increase in ship resistance and small auxiliary power requirement.

2.3 Disadvantages

The main disadvantages of activated ¯ns for this ship class are:

1. They are not e®ective at low speeds, which are likely to occur in these ships.
2. They take up moderate machinery space, especially if they are retractable. Retractability is a derirable feature so that they are not vulnarable to damage.
3. High initial cost.

2.4 Recommendations

Although ¯ns constitute the single most e®ective roll stabilizer system in existence, they su®er from severe degredation at low speeds. Due to this limitation, active ¯n stabilizers are not recommended for this design. If a su±ciently high speed is assured by a suitable propeller selection, then they might become a very strong candidate for consideration.

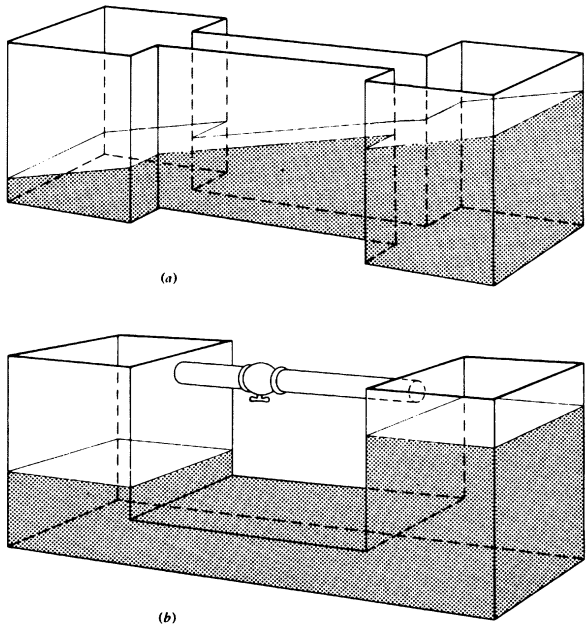

Figure 3: Passive tank stabilizers. (a) Free surface tank. (b) U{tube tank

3 ROLL TANKS

3.1 Theoretical Background

Passive roll tank systems use the roll of the ship itself to cause water in the tanks to move in such a way as to oppose the motion. There are two main types of roll tank systems, namely free surface and U{tube tanks schematically shown in Figure 3 [Bhattacharyya (1978)]. The principle of operation is similar in both cases. Starting from rest with water level in the two tanks, see Figure 4 [Rawson & Tupper (1984)], if the ship rolls to starboard water °ows from port to starboard until the maximum roll angle is reached. As the ship now tries to recover, the water will try to return but will lag and the moment due to the water will oppose the roll velocity. Also, if the resistance of the duct is high the water will not be able to return before the ship is rolling to port; i.e., the level of water in the tanks can be made to lag the roll motion. By carefully adjusting the resistance of the duct the system can be tuned to give maximum stabilizing e®ect. This will be the case when the phase lag equals exactly 90 degrees.

One limitation of roll tank systems is that the system can only be tuned to one frequency. This is chosen as the natural period of roll because it is at this period that the really large angles of roll can be built up. At other frequencies the passive tank system may actually lead to an increase in roll angle. A more sophisticated system is one in which the resistance of the duct can be varied to suit the frequency of the exciting waves. In this way roll damping is achieved in all wave lengths. One way to e®ectively control the resistance in the duct is through the U{tube design shown in Figure 3. In this design, the intent is to make the natural frequency of the tanks as nearly equal as possible to the natural frequency of the ship for any particular loading condition. An air valve system is installed either at the top of the tanks or in the connecting tube. In this con¯guration a path is provided for the air above the °uid in one wing tank to move to the space above the

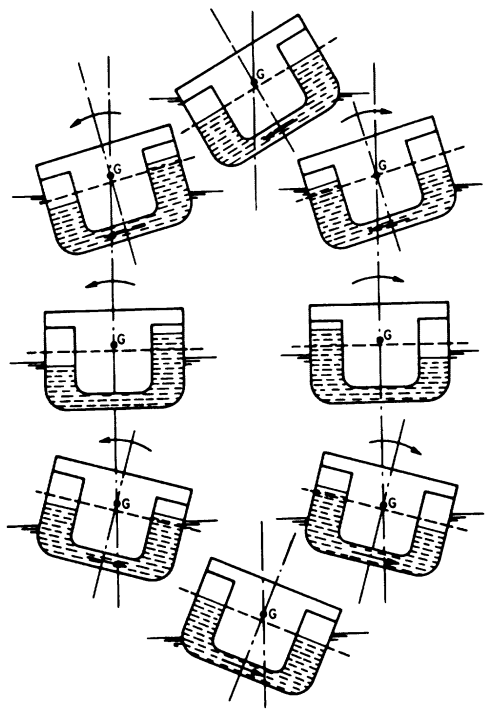

Figure 4: Passive tank system

°uid in the other wing tank. If this air path is controlled by a valve, the amount of air °ow and consequently the volume rate of water °ow can be controlled. This means that the water movement can be made 90 degrees out of phase with the ship motion for a variety of operating conditions.

The main features of the U{tube tank are as follows:

1. Relative simplicity.
2. Economical installation and operation, since no power is required for operation and the U{ tube tank can be easily installed during or after the construction of the ship.
3. Improved e®ectiveness from enhancing the seakeeping ride qualities of the ship.
4. Possibility of weight reduction by emptying the tank when not used for stabilization.
5. Provision of extra storage for fresh water, reserve fuel, and other loads.

A typical plot of the nondimensional amplitude of tank moment μ_a, where

$$\mu_a = M_{ta} = \rho_t g b^3 l ;$$

M_{ta} = amplitude of the exciting moment due to the tank ;

ρ_t = mass density of tank °uid ;

g = acceleration of gravity ;

b = breadth of tank ;

l = length of tank ;

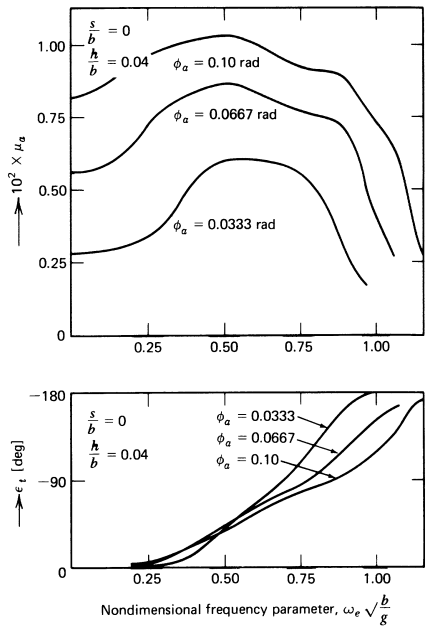

Figure 5: Amplitude and phase angle of tank moment for di®erent amplitudes of motion

h	=	water height ;
s	=	vertical position of tank ;
Á a	=	amplitude of the rolling motion ;
! e	=	frequency of encounter of incoming waves ;
² t	=	phase angle between tank exciting moment and rolling motion :

and the phase angle is shown in Figure 5. The following conclusions follow from the ¯gure [Van Den Bosch & Vugts (1966)]:

1. The exciting moment of the tank is approximately proportional to the motion for low frequencies, whereas the plot for the phase angles becomes °atter as motion increases.

2. The tank moment is proportional to the length of the tank measured in the longitudinal direction.

3. The moment per unit length is proportional to b^3 for the same h=b ratio. The water height h is important for the tuning of the tank, and the natural frequency of the tank can be altered by changing the water depth inside it. The amplitude of the tank exciting moment increases with the increase in water depth. The amplitude of tank moment (for a ¯xed breadth) at about the natural frequency of the tank is approximately proportional to $\sqrt{h=b}$.

4. The position of the tank, s, is positive if the tank is located above the ship's rolling axis. The amplitude of tank moment is largest when s is the highest. Also, the plot of the phase angle is °atter when the tank is located higher. Both of these qualities are desirable for motion stabilization.

3.2 Advantages

The main advantages of passive roll tank systems for this design are as follows:

1. High roll reduction rates are possible, up to 70%.
2. They remain e®ective at low speeds.
3. Very little auxiliary power required.
4. Moderate initial cost and low maintenance required.
5. Since they are internal to the hull, they are not vulnerable to damage.

3.3 Disadvantages

The main disadvantages of passive roll tank systems for this design are as follows:

1. Moderate space occupied in the hull, generally larger than activated ¯ns.
2. 1{4% reduction in deadweight capacity for constant displacement.
3. Reduction in initial statical stability due to free surface e®ects, especially for free surface tanks.

3.4 Recommendations

Due to their advantages, compared with other stabilization systems for this ship, passive roll tanks should be further considered. One of their primary operational disadvantages is the fact that quick changes in rolling motion may disrupt the smooth operation of the U{tube tank, which has comparatively large response times in relation to active ¯n systems. Therefore, one must ensure adequate roll damping for the intended missions of the ship through bilge keels as outlined in the next section. Then, a passive roll tank system should be properly designed by taking due consideration of other storage and space requirements of the ship. The baseline tank con¯guration and principal dimensions can be evaluated once the roll resonant frequencies of the ship equipped with bilge keels are determined. Active roll tanks are not recommended since they inherit all the disadvantages of the passive roll tanks in addition to large initial cost and auxiliary power requirements with minimal added advantages.

4 BILGE KEELS

4.1 Theoretical Background

The most widely used, as well as the simplest kind of roll stabilizing devices, are bilge keels, which are ¯xed ¯ns attached to the hull at or near the bilge. Regardless of their speci¯c structural shape and details, bilge keels operate according to a very simple and e®ective theory. The natural period of roll for a ship is directly proportional to the ship's mass radius of gyration. With bilge keels

projecting from the sides of the ship causing an increased mass of water to roll with the ship (added mass), the radius of gyration is increased, thus increasing the period of roll. Under forced rolling conditions encountered in a seaway, with the increased natural period resulting from the bilge keels, the amplitude of roll is decreased.

The major e®ect of bilge keels, however, is the increased resistance to roll due to viscous{eddy e®ects. In the case of bilge keels, damping moment is generated by a component supplied by the pressure resistance of the bilge keel itself and by a component due to the change in the pressure distribution on the hull. For vessels not ¯tted with bilge keels, roll damping is caused only by the dissipation of energy in radiated waves and in viscous °ow around the hull. Bilge keels increase considerably the energy dissipation due to viscous °ow. The damping e®ect of bilge keels, although present at all speeds, increases with increasing forward speed. At high speeds it can be 2:5 times higher its value at zero speed. This suggests that there is a hydrodynamic lift e®ect in the forward sections of the bilge keels. This hydrodynamic lift resists the lateral forces of roll and adds to the steadiness of the ship.

The main e®ects of bilge keels can be summarized as follows:

1. Bilge keels remain e®ective at low speeds and are used for a wide variety of ship sizes and forms.
2. The damping e®ect increases with the area of the bilge keel and also with the distance of the bilge keel from the rolling axis.
3. Bilge keels appear to be more e®ective for larger angles of rolling.
4. The e®ect of bilge keels varies inversely with the moment of inertia of the ship about the rolling axis. Therefore, bilge keels are more e®ective in vessels with small mass moments of inertia; i.e, when the weights are concentrated near the ship's centerline.

4.2 Advantages

The main advantages of bilge keels for this case study are:

1. Bilge keels are simple and easy to ¯t. In most cases it is hard to justify not using them, especially if \ship quietness" is not a major issue.
2. They remain e®ective at relatively low speeds.
3. Negligible reduction in ship's deadweight capacity, no reduction in initial static stability, no auxiliary power requirement, and negligible space occupied in hull.
4. Low initial cost.

4.3 Disadvantages

The main disadvantages of bilge keels for this case study are:

1. Since bilge keels are external to the main hull, there is an added resistance to ahead motion which has to be overcome by the main engines. The added resistance may be partially o®set by a reduction in resistance of the main hull due to the reduced roll amplitude. Further, it is possible that improvements in the seakeeping behavior of the ship will result in lesser voluntary speed reductions in a seaway.

2. Compared to other techniques of stabilization, bilge keels o®er smaller amounts of roll reduction.

3. Bilge keels are usually carefully aligned with the °ow around the hull in calm waters in order to reduce their resistance in forward motion. However, when the ship rolls the bilge keels are no longer in line with the °ow and can lead to signi¯cant increases resistance.

4. They are vulnerable to damage.

5. Stabilization by the use of bilge keels is more e®ective only in the region of resonance. Although, this is typically associated by the largest magnitudes in roll motions, there exist several conditions where this is not the case due to complex nonlinear interactions.

4.4 Recommendations

Due to their simplicity and relative e®ectiveness at low speeds, bilge keels are recommended for this case study. Prior to design and out¯tting, it is necessary to conduct model tests and computational °uid dynamics (CFD) calculations to determine appropriate placement. This will minimize the added drag both for zero and non{zero roll. In addition, we recommend a series of seakeeping evaluation studies utilizing di®erent sizes of bilge keels in order to gain a better understanding of their e®ectiveness. This study will be speci¯c for this ship and the expected operation areas and missions of the ship. Existing software at NPS utilizing strip theory [Beck & Troesch (1989)] will be used to model the ship, and the size and locations of the bilge keels. Seakeeping calculations will then be performed for each ship speed and covering a su±cient range of frequencies of encounter of waves. Computation of response in regular sinusoidal waves will then serve as input to more realistic calculations incorporating the stochastic nature of a seaway. Previously de¯ned response amplitude operators will be convolved with the spectrum of the seaway in order to produce the spectrum of the response. The underlying assumptions here are (i) linearized motions around nominal and (ii) Gaussian probability density functions. Although non{Gaussian processes could be considered, it is assumed that most stochastic processes relevant to the physical problem at hand can be approximated as being normally distributed with acceptable accuracy. Statistics of extremes [Price & Bishop (1974)] will then be used in order to compute tactical assessment criteria. It should be emphasized here that the computations will di®er according to the particular criterion *and* according to the mission at hand; for example this will determine whether we utilize a mean or an extreme value and short or long term statistics computations. The intended missions of the ship will set the requirements that will be imposed on roll angle.

Having the tools to compute various performance indices in a given seaway, we can arrive at a single measure of merit as follows. Suppose that the ship will be conducting operations in a sea environment characterized by a signi¯cant wave height and a certain modal period, so that the sea spectrum is de¯ned. For all ship headings relative to the predominant wave direction for which the operations are to be conducted, a polar plot diagram, similar to Figure 6, can be prepared. Signi¯cant wave heights are represented along the radial direction of the polar plot. The shaded

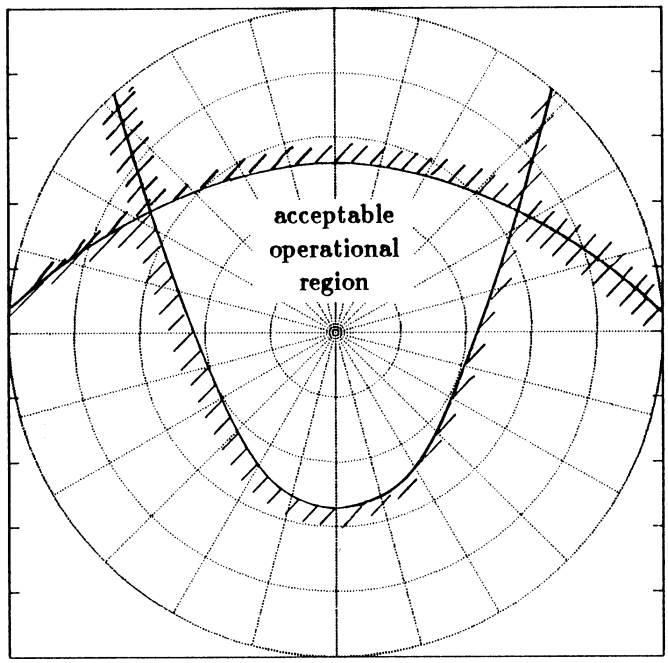

Figure 6: Polar diagram illustrating the stabilization operability index

areas in the plot show that one or more of the tactical assessment criteria is exceeded. Letting the polar area of the disk be A_0 and the subset of A_0 within which the ship can conduct the speci¯c operation be A, a performance index characterizing the ability of the ship to perform this speci¯c operation in the speci¯ed sea condition can be de¯ned as $100(A=A_0)$. In computing the above index one could easily take into account the probability of occurrence of a particular sea state in the area of interest by introducing appropriate weight factors. Similar computations can be performed for di®erent operations. The performance indices can then be added (in a weighted sum to account for the frequency of conducting a particular operation for the ship class of interest) so that a combined performance index is obtained. This combined index will then be calculated for a series of di®erent bilge keel sizes and locations along the hull.

Another aspect of studies must be the nonlinear dynamics of the system in uncoupled and coupled roll motions. Although most studies are currently limited to linear or linearizable models, there is evidence of strong nonlinear e®ects in certain cases [Falzarano et al (1992)], [Nayfeh & Khdeir (1986)]. These studies will be conducted for this current class of ships in order to avoid parameter regions of parametric resonance and/or unexpected dynamics during the ship's operation.

5 PROPELLER

5.1 Problem Statement

The T{AGOS class ships were designed for surveillance operations and quietness was a major issue. In the proposed modi¯cation, however, it is possible that either a new propeller or the same

propellers at di®erent operating points might result in signi¯cantly higher speeds. The purpose of this section is to get an estimate of the speed increase that can be realistically expected from a propeller change.

5.2 Analysis

Our ¯rst analysis was based on the Wageningen B{series propellers since their thrust, torque, and e±ciency characteristics are available for a variety of pitch{to{diameter and expanded area ratios. Data for the current design indicate that the ship is equipped with two four bladed propellers, 8 ft diameter, approximately 8 ft pitch, and running at 180 rpm for a ship speed of 11:8 knots at full power. [1] Calculation of the torque coe±cient K_Q gave us a value of about 0:078 and the advance coe±cient $J = 0:83$. The closest B{series 4 bladed propeller (data obtained from [Bernitsas et al (1981)]) that would match these values required pitch to diameter ratio in excess of 1:4. This is signi¯cantly higher that the reported value of 1:0 and the results would not be reliable. Therefore, we need to approach the problem in a di®erent way.

Jane's Fighting Ships provided a data base of U.S. Navy ships similar to this design, with similar missions and speci¯cations. Speed, displacement, and power characteristics for these ships were obtained and the results are summarized in the following table.

Class	Description	V	Δ	P_B	A_C	V^0	$\pm V$
Stalwart	Ocean Surveillance	11:0	2262	3200	0:0132		
Gyre	Oceanographic Research	11:5	1427	1700	0:0209	12:8	16:5
Thompson	Oceanographic Research	15:0	3251	6000	0:0228	13:2	19:9
Melville	Oceanographic Research	14:0	2670	3000	0:0325	14:8	34:9
McDonnell	Surveying	12:0	2054	2550	0:0202	12:7	15:2
Path¯nder	Surveying	16:0	4762	6000	0:0357	15:3	39:2
Asheville	Research	16:0	245	1450	0:0204	12:7	15:6
Chanticleer	Submarine Rescue	15:0	2320	3000	0:0364	15:4	40:1
Edenton	Salvage and Rescue	16:0	2929	6000	0:0258	13:7	24:9

The various symbols are as follows:

V = ship speed, knots
Δ = displacement, tons
P_B = installed horsepower
A_C = Admiralty Coe±cient
V^0 = Admiralty Coe±cient Based Speed
$\pm V$ = Speed Increase, percent

These ships were taken from [Jane's (1995)] and are of similar characteristics (hull form and size) to the T{AGOS monohulls, the Stalwart Class. The Admiralty Coe±cient is a non{dimensional quantity de¯ned by,

$$A_C = \frac{\Delta^{2/3} V^3}{P_B} :$$

[1] Data were obtained from Coast Guard Students at NPS. Since the USCG T{AGOS ships may be di®erent, ASC should verify these data

Large values of A_C re°ect ships that are fast for their displacement and horsepower, thereby indicating an e±cient propeller design. As can be seen from the table, the Stalwart Class has the lowest A_C of all which indicates that the ship was originally designed for quiet operations. In order to assess potential speed increases utilizing the same displacement and engines, we can apply the Admiralty Coe±cients for the other ships and calculate its new speed, V^0. This is the predicted speed of the Stalwart Class ship based on its own engines and displacement, and using data from similar ships. The last entry of the table represents the percentage increase of the speed predicted by this extrapolation technique. Filtering of these results indicates that the Path¯nder class represents a newer design with a slimmer hull form that the Stalwart. The Melville class has three shafts instead of two for the Stalwart, while rescue ships were designed for speed and it is unlikely that their performance will be matched. Therefore, by looking at the remaining ships we can conclude that speed increases in the range of 15% to 20% are feasible with a redesigned propeller.

5.3 Recommendations

Based on the above preliminary results, we anticipate a 20% increase in ship speed. In order to proceed with a better estimate we will need to work with the actual propeller characteristics for the ship. This will allow proper scaling for the B{series data that we have. We anticipate that this procedure will yield better and more reliable propeller/speed estimates for the ship. With this added knowledge, a more comprehensive analysis of roll stabilization techniques will also be feasible.

6 SUMMARY

6.1 Roll Stabilization

The di®erent roll stabilization techniques addressed in this report are summarized in the following table:

Type	Fins	Tanks	Bilge keels	RRS
Percentage roll reduction	High	Moderate	Low	High
Low speed e®ectiveness	Low	High	High	Low
Ship resistance penalty	Moderate	None	Low	Moderate
Power requirements	Low	None	None	Low/Mod
Space requirements	Moderate	Mod/High	Low	Low/Mod
Vulnerability to damage	Low	None	Moderate	Low
Initial cost	High	Moderate	Low	Moderate
Maintenance	Moderate	Low	Low	Moderate

The last column of the table presents a summary for Rudder Roll Stabilization (RRS) which, although not discussed in detail previously, has shown promising applications for both the Coast Guard and the Navy [Baitis et al (1983)], [Baitis & Schmidt (1989)]. It is based on the fact that when the ship's rudder is placed o® the centerline, a lift force is generated that generally acts at a point below the roll center of the ship. This side force causes both roll and yaw moments. If proper phasing is achieved between the rudder induced roll moment and the wave excited roll moment, the

rudder can serve as a roll stabilizer at or near roll resonance. For small craft rudder stabilization may be as e®ective as that due to ¯ns, since rudder induced roll moments are as signi¯cant as the moments generated by the ¯ns. The relatively shorter distance between the roll center and the lift force is o®set by the increased °ow velocity at the rudder due to the propeller action. Roll reductions obtained from such RRS systems can be almost as high as those obtained from ¯ns, with the additional advantage that the existing steering gear may e®ectively be all the hardware that is needed. However, just as with activated ¯ns, RRS is not as e®ective at low speeds.

6.2 Proposed Methods

Based on this preliminary study, the following action items are recommended:

1. Out¯t the ship with bilge keels subject to:
   (a) Model tests and CFD studies to minimize added drag in steady forward motions.
   (b) Seakeeping studies to maximize window of operations in all sea states and headings.
   (c) Nonlinear dynamics studies to avoid parametric excitation of roll in head/following seas.
2. Design passive U{tube roll tanks subject to:
   (a) Finalization of bilge keel size and location. This will provide a baseline stabilized system.
   (b) Ship design studies that would assess the impact of roll tanks on ship internal volumes as well the possible utilization of the roll tanks for storage.
3. Investigate the promising potential of rudder roll stabilization (RRS) subject to:
   (a) Detailed control algorithm studies to guarantee performance and robustness in a variety of operating conditions.
   (b) Based on these studies, determine whether the existing steering engines and other COTS elements could provide the required bandwidth for the RRS system.

7 REFERENCES

1. Baitis, A. E. and Schmidt, L. V. (1989) Ship roll stabilization in the U.S. Navy. *Naval Engineers Journal*, pp. 43{53.
2. Baitis, A. E., Woolaver, D. A., and Beck, T. A. (1983) Rudder roll stabilization for Coast Guard cutters and frigates. *Naval Engineers Journal*, pp. 267{282.
3. Beck, R. F. and Troesch, A. W. (1989) Documentation and user's manual for the computer program SHIPMO.BM. Report No. 89{2, Ann Arbor, Michigan.
4. Bernitsas, M. M., Ray, D., and Kinley, P. (1981) K_T, K_Q and e±ciency curves for the Wageningen B{series propellers. The University Of Michigan, Dept. of Naval Arch. & Marine Engin., Report No. 237.
5. Bhattacharyya, R. (1978) *Dynamics of Marine Vehicles*. John Wiley and Sons, New York.

6. Falzarano, J. M., Shaw, S. W., and Troesch, A. W. (1992) Application of global methods for analyzing dynamical systems to ship rolling motion and capsizing. *Int. J. of Bifurcation and Chaos*, 2, 1.

7. Gillmer, T. C. and Johnson, B. (1982) *Introduction to naval Architecture*. Naval Institute Press, Annapolis, Maryland.

8. Jane's Fighting Ships, 1994{1995.

9. Nayfeh, A. H. and Khdeir, A. A. (1986) Nonlinear rolling of ships in regular beam seas. *Int. Shipbuilding Progress*, 33, 379.

10. Price, W. G. and Bishop, R. E. D. (1974) *Probabilistic Theory of Ship Dynamics*. John Wiley and Sons, New York.

11. Rawson, K. J. and Tupper, E. C. (1984) *Basic Ship Theory* Vol. II. Longman Scientific, UK.

12. Van Den Bosch, J. J. and Vugts, J. H. (1966) On roll damping by free{surface tanks. *Transactions*, RINA.