NAVAL POSTGRADUATE SCHOOL
Monterey, California

ECE 3550 | Fiber Optics Experiment 4 | 8/96 Po

DATA LINK SYSTEM PERFORMANCE

Purpose: In this experiment we will measure and compute the system performance parameters for a simple digital fiber optic link.

Equipment:

General purpose test equipment (TEK 2213 dual trace scope, multimeter, signal generator)
Power supply (+5 volts)
Fiber optic data link (HFBR-1402 Transmitter, HFBR-2402 Receiver, Siecor 50/125 GI fiber optic cable (with connectors))
75451 Dual peripheral driver IC
10K Ω potentiometer
Prototype board
Photodyne 22XL or 22XLA optical multimeter
Spec sheet for fiber optic link (attached)
Resistors (33 Ω and 1K Ω)
Capacitor (0.1 μF)
Handheld infrared viewer

Procedure:

1. We will use the circuit of Fig. 1 as the transmitter circuit. The resistor R_1 will be a resistor in series with the 10K potentiometer connected as a variable resistor. If the diode voltage drop is nominally 1.8 volts, *calculate the value* of the resistor in series with the potentiometer in order to avoid exceeding the maximum current rating of the diode. We will use a resistor with a value of 56 Ω for this resistor.

2. Connect the circuit of Fig. 1, but *leave the collector output (pin 3 or 5) of the driver circuit disconnected for now.* The pin diagram for the 75451 is shown in Fig. 2. We will call the series connection of the 56Ω resistor in series with the self-tapped potentiometer R_1. Using the infrared viewer, check for proper operation of the circuit by observing the infrared light out of the LED source of the transmitter.

3. Connect the fiber to the transmitter. Attach the other end of the fiber to the optical multimeter. Measure and plot the optical power in the fiber (in dBm or dBμ) vs. the DC current through the diode (as measured with the multimeter). (Adjust the potentiometer to control the DC current.) This plot should be on semilog paper with the power on the linear axis and the current on the logarithmic axis. Why? (*Plot the data as you measure it in the lab.*)

4. Wire up the receiver as in Fig. 3. Connect the fiber to the receiver. Find and measure the optical power level that causes the receiver output to change level (i.e., where the output pulse is midway between its extreme values)–this is the "optical threshold power". Note that the receiver inverts the output signal from the input signal.

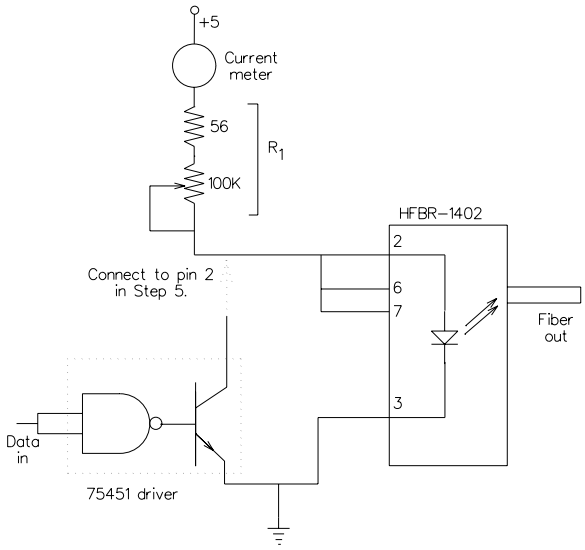

Figure 1: Transmitter circuit.

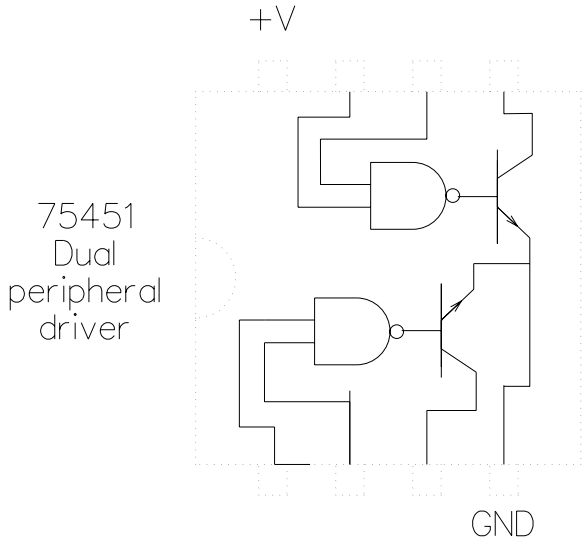

Figure 2: 75451 pin connections.

5. Return the optical power level to an intermediate value. The input to the 75451 driver should be a TTL-valued square wave (0 to 5 volt peak) with a nominal frequency of 1 KHz. Connect this signal to the data input of Fig. 1 and connect the output of the 75451 to pin 2 of the optical transmitter. Observe proper operation of the link by obtaining an inverted replica of the drive circuit from the receiver. (This may require some adjustment of your transmitter output power.)

6. Adjust the optical power level to find the minimum power at the detector required to ensure proper operation of the data link. (Is the limiting power associated with the transmission of a **1** or a **0** at the signal generator?)

7. Compute the system margin. Using the Siecor cable specs found in the table attached, compute the nominal expected link distance.

8. Suppose that we insert an intermediate cable between the transmitter and receiver as shown in Fig. 4 by breaking the Siecor cable and attaching connectors. If we were to connect the transmitter fiber to a HP–3021 cable (Specifications for the fiber cables are found in Table 1), *calculate* the connector losses expected due to the NA mismatch. Due to fiber diameter mismatch? Repeat for the connector between the intermediate fiber and the receiving fiber.

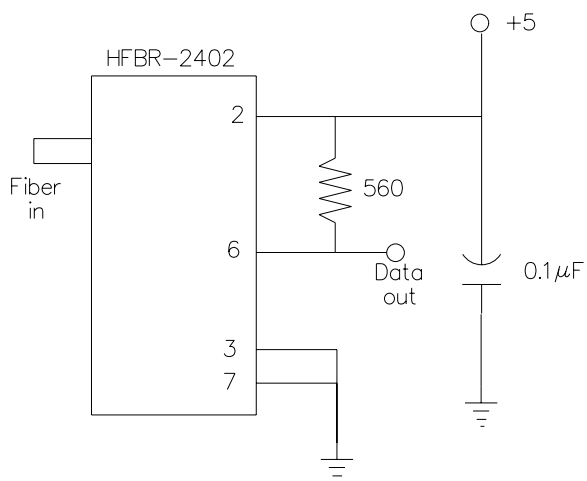

Figure 3: Receiver circuit diagram

9. Return the optical power level to its maximum value. Set the data rate to 200 Kb/s and measure the fall time t_f and the rise time t_r of the output of the receiver. (Note that the scope face has the 10% and 90% points indicated with dotted lines. Proper use of the vertical (uncalibrated) scale multiplier factor will simplify this measurement.)

10. Increase the data rate. Describe the limiting factor (i.e., t_r or t_f) of the output. What is the maximum data rate of the link as used?

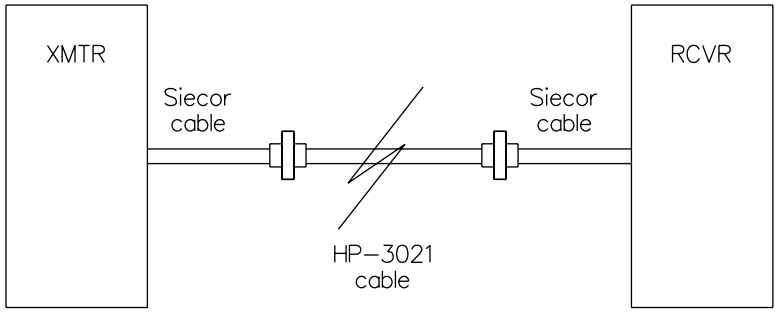

Figure 4: Hypothetical link with intermediate cable

Parameter	Siecor cable	HP–3021 cable
Attenuation	2.4 dB/km @ 850 nm	5.5 @ 850 nm
NA	0.2	0.3
BW–distance	600 MHz-km	40 MHz-km
	@ 850 nm	@ 850 nm
g	2	2
Diameters	50/125	100/140

Table 1: Specifications for fiber cables in hypothetical link.

Report: Submit a brief (but complete) report summarizing your observations. This report is due within one week of completing the laboratory exercise.