Chapter 5

Assignment 5 Solutions

4.1. Consider two fibers with the properties given in the table below. Assuming perfect alignment calculate the splicing losses for...

a. ...light going from fiber #1 into fiber #2, and

...light going from fiber #2 into fiber #1.

	Fiber 1	Fiber 2
n_1	1.45	1.48
Δ	1.5%	1.2%
a	50 μm	30 μm
g	1.80	2.00

Solution: We first need to calculate the NA of the fibers.

$$\begin{aligned} \mathrm{NA} &= n_1\sqrt{2\Delta} \\ \mathrm{NA}_1 &= (1.45)(\sqrt{2(0.015)} = 0.251 \\ \mathrm{NA}_2 &= (1.48)(\sqrt{2(0.012)} = 0.229\,. \end{aligned} \tag{5.1}$$

a. For going from fiber #1 into fiber #2:

i. We have $\mathrm{NA}_r < \mathrm{NA}_e$, so

$$\eta_{\mathrm{NA}} = \left(\frac{\mathrm{NA}_r}{\mathrm{NA}_e}\right)^2 = \left(\frac{0.229}{0.251}\right)^2 = 0.832 \Rightarrow -0.799 \text{ dB}\,. \tag{5.2}$$

ii. We also have $a_e > a_r$, so

$$\eta_r = \left(\frac{a_r}{a_e}\right)^2 = \left(\frac{30}{50}\right)^2 = 0.36 \Rightarrow -4.44 \text{ dB}\,. \tag{5.3}$$

iii. We have $g_e < g_r$, so

$$\eta_g = 1 \Rightarrow 0 \text{ dB}. \tag{5.4}$$

The total loss is

$$\eta = \eta_{\text{NA}} + \eta_r + \eta_g = -0.797 - 4.44 - 0 = -5.24 \text{ dB} \Rightarrow 0.299 = 29.9\%. \tag{5.5}$$

Note: The losses due to the radius mismatch predominate.

b.For going from Fiber #2 into Fiber #1.

i. We have $\text{NA}_r > \text{NA}_e$, so

$$\eta_{\text{NA}} = 1 \Rightarrow 0 \text{ dB}. \tag{5.6}$$

ii. We also have $a_e > a_r$, so

$$\eta_r = 1 \Rightarrow 0 \text{ dB}. \tag{5.7}$$

iii. We have $g_e > g_r$, so

$$\eta_g = \frac{g_r(g_e+2)}{g_e(g_r+2)} = \frac{(1.8)(2.0+2)}{(2.0)(1.8+2)} = 0.947 \Rightarrow 0.235 \text{ dB}. \tag{5.8}$$

The total loss is

$$\eta = \eta_{\text{NA}} + \eta_r + \eta_g = 0 + 0 + 0.235 = 0.235 \text{ dB} \Rightarrow 0.947 = 94.7\%. \tag{5.9}$$

It is much more efficient to go from fiber #2 into fiber #1.

4.2 Consider two 50/125 μm SI fibers. Calculate the coupling coefficient if the fibers are laterally misaligned by 5% (i.e., $d/a = 0.05$).

Solution: The expression for the coupling efficiency of a step-index fiber in the presence of a lateral misalignment is found in the errata as Eq. 4.14,

$$\begin{aligned} \eta_{\text{SI}} &= \left(\frac{2}{\pi}\right)\cos^{-1}\left(\frac{d}{2a}\right) - \left(\frac{d}{\pi a}\right)\sqrt{1-\left(\frac{d}{2a}\right)^2} \\ &= \left(\frac{2}{\pi}\right)\cos^{-1}(0.025) - \left(\frac{0.05}{\pi}\right)\sqrt{1-\left(\frac{0.05}{2}\right)^2} \\ &= 0.968 = 96.8\% \Rightarrow 0.1405 \text{ dB}. \end{aligned} \tag{5.10}$$

Hence, we find that 97% of light is coupled through the misalignment for a loss of 0.1405 dB.

4.3. Consider a connector that joins two single-mode fibers with the same mode-field *radius* of 4 μm at 1300 nm. The core index of each fiber is 1.47; the index of the medium between the fiber ends is $n = 1$.

a. Using a computer, plot the connector loss (in dB) as a function of lateral displacement d for $0 \leq d \leq 8$ μm. Assume that the longitudinal offset and the angular misalignment are zero.

b. Using a computer, plot the connector loss (in dB) as a function of longitudinal displacement s for $0 \leq s \leq 8$ μm. Assume that the lateral offset and the angular misalignment are zero.

c. Using a computer, plot the connector loss (in dB) as a function of angular misalignment θ for $0 \leq \theta \leq 0.1°$. Assume that the lateral and longitudinal offsets are zero.

Solution: The equation for single-mode connector losses due to misalignments (d, s, and θ) is

$$L_{\text{sm}} = 10 \log \left(\frac{16 n_1^2 n_3^2}{(n_1 + n_3)^4} \frac{4\sigma}{q} e^{-\frac{\rho u}{q}} \right) \tag{5.11}$$

where

$$\begin{aligned}
\lambda &= 1300 \times 10^{-9} \\
n_1 &= 1.47 \\
n_3 &= 1.00 \\
W_1 &= W_2 = 8 \times 10^{-6} \\
k &= \frac{2\pi n_3}{\lambda} \\
p &= (kW_1)^2 \\
G &= \frac{s}{kW_1^2} \\
F &= \frac{d}{kW_1^2} \\
q &= G^2 + (\sigma + 1)^2 \\
\sigma &= \left(\frac{W_2}{W_1} \right)^2 \\
u &= (\sigma + 1)F^2 + 2\sigma FG \sin(\theta) + \sigma(G^2 + \sigma + 1)(\sin\theta)^2 .
\end{aligned}$$

Substitution into the equations for the intermediate parameters gives

$$\begin{aligned}
k &= 4.83 \times 10^6 \\
\rho &= 1495 \\
G &= (3.23 \times 10^3)s \\
F &= (3.23 \times 10^3)d \\
\sigma &= 1
\end{aligned}$$

a) In this part we have $s = 0$ ($G = 0$) and $\theta = 0$ ($\sin\theta = 0$); only d is nonzero. The intermediate variables are

$$\begin{aligned} F &= (3.23 \times 10^3)d \\ u &= 2F^2 = (2.09 \times 10^7)d^2 \,. \end{aligned}$$

Substitution into the loss equation leads to

$$L_{\mathrm{sm}} = -10 \log \left(0.929 e^{-7.81 \times 10^9 d^2} \right) \,. \tag{5.12}$$

This equation is plotted in Fig. 5.1.

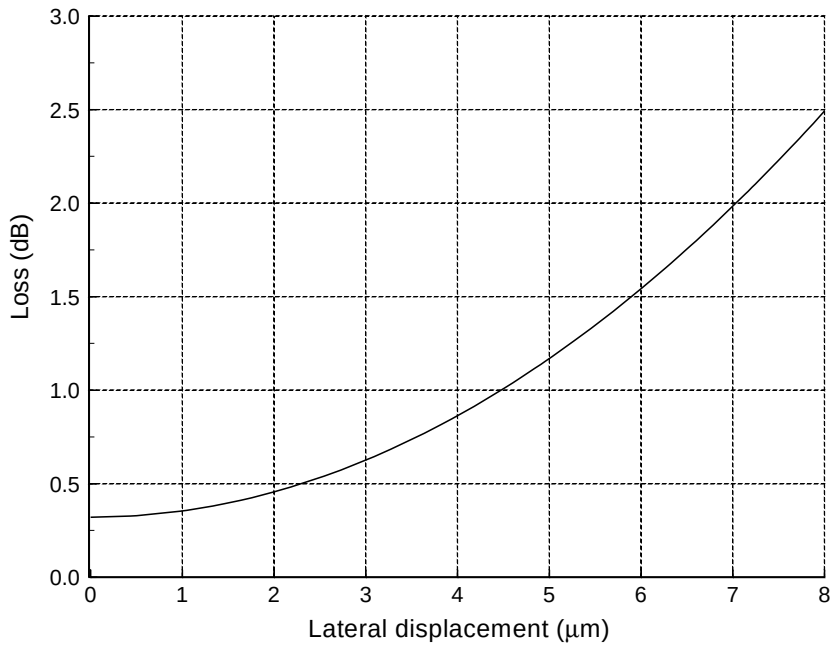

Figure 5.1: Losses due to lateral displacement.

b) In this part we have $d = 0$ and $\theta = 0$; only s is nonzero. The intermediate variables are

$$\begin{aligned} G &= (3.23 \times 10^3)s \\ F &= 0 \\ u &= 0 \,. \end{aligned}$$

Substitution into the loss equation leads to

$$L_{\mathrm{sm}} = -10 \log \left(\frac{3.714}{(1.045 \times 10^7)s^2 + 4} \right) \,. \tag{5.13}$$

This equation is plotted in Fig. 5.2.

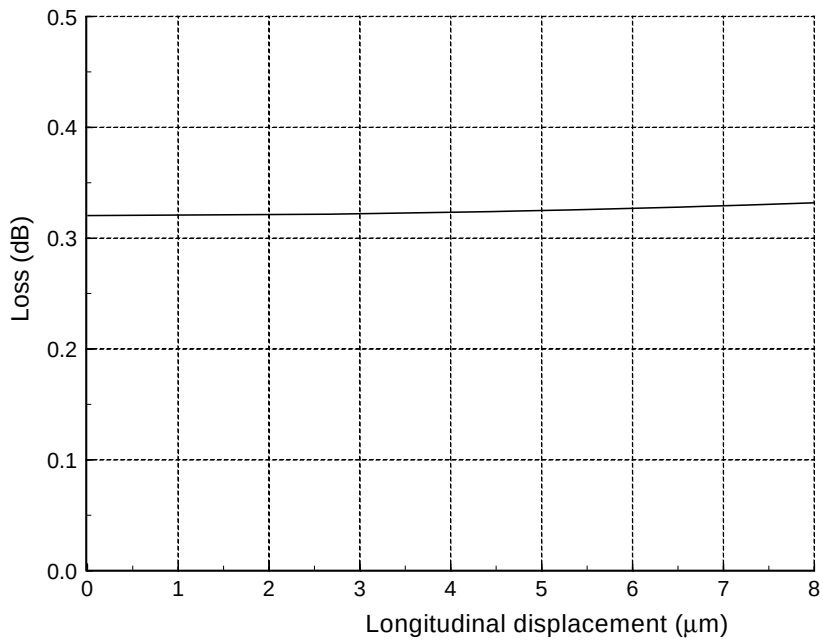

Figure 5.2: Losses due to longitudinal displacement.

c) In this part we have $d = 0$ and $s = 0$; only θ is nonzero. Substitution into the equation for the intermediate parameters gives

$$\begin{aligned} G &= 0 \\ \sigma &= 1 \\ F &= 0 \\ q &= 4 \\ u &= 2\sin^2(\theta) \ . \end{aligned}$$

Substitution into the loss equation leads to

$$L_{\mathrm{sm}} = -10\log\left(0.929e^{-747\sin^2\theta}\right) . \tag{5.14}$$

This equation is plotted in Fig. 5.3.

4.4. a. Sketch a bidirectional link that uses an ideal 2×2 coupler at each end. Show that only 25% of the transmitter power from one end will reach the receiver at the other end.

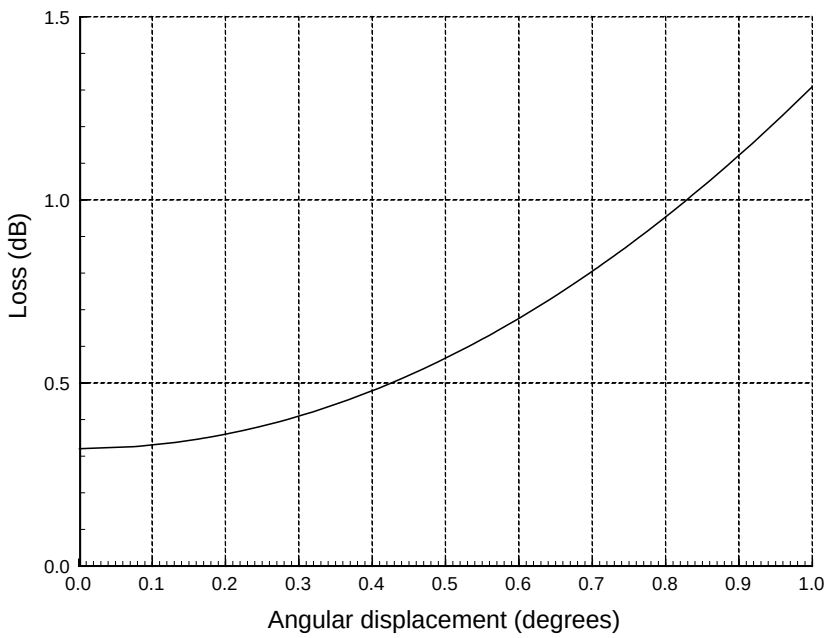

Figure 5.3: Losses due to angular misalignment.

b. Sketch a bidirectional link that uses an ideal circulator at each end. Show that ideally 100% of the transmitter power will reach the receiver.

Solution: This solution appears in Fig. 5.4. (Note that a "directional coupler" is the same thing as a "circulator".

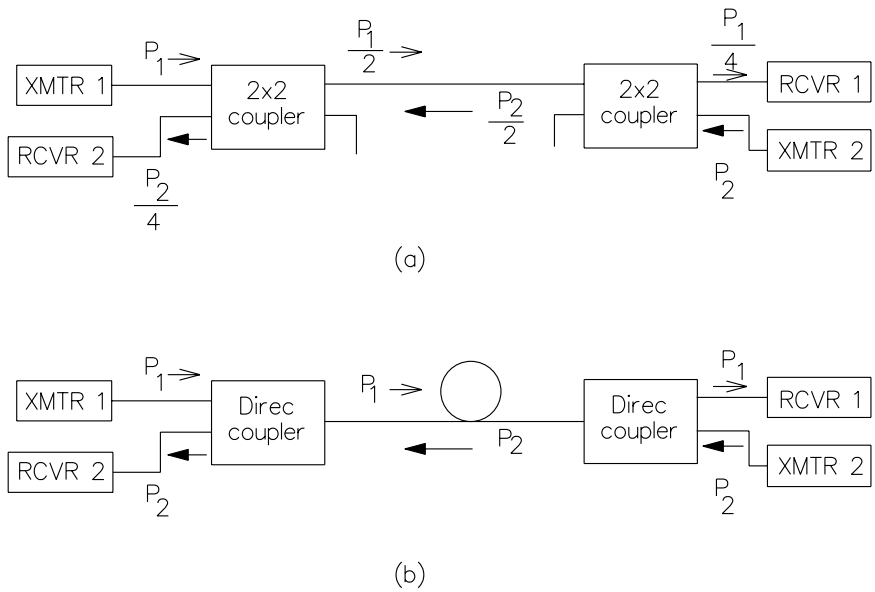

Figure 5.4: Figures for bidirectional link implemented with (a) ideal 2×2 couplers and (b) ideal directional couplers.