NAVAL POSTGRADUATE SCHOOL
Monterey, California

EC 3210 **Laser Pulser-Receiver** 11/98 Po

Objective: In this experiment we will investigate the transmitter portion of a pulsed laser system. The transmitter is a GaAs semiconductor laser driven by a series of current pulses; the receiver is a silicon pin diode followed by a two stage preamp. We will also investigate the parameters that are used to describe the output of a pulsed laser.

Equipment:

Laser diode (Laser Diode Labs LD 62 laser) with pulse circuitry
Laser receiver
Power supplies
  HP 711A high voltage power supply
  Dual supply (± 15 volts)
  Power supply (−20 volts)
Wavetek 142 signal generator
TEK 2213 oscilloscope

DANGER: EYE HAZARD! This laser produces sufficient output power to damage the eye if observed at distances closer than 15 cm (6 inches). Due to the wide beam divergence of this laser the power rapidly falls off with increasing distance and is safe to observe at distances beyond 15 cm. There is no danger of skin damage from the unfocused beam of this laser.

Procedure:

1. The pulser circuit diagram is found in Fig. 1 on the following page. The circuit operates in the following manner:

   The 0.022 μF capacitor is alternately charged to a few hundred volts and discharged through the laser diode. The charge part of the cycle is done by the high voltage supply through the HEP240 transistor. During charging the this transistor is ON. The SCR is OFF during the charging, thus preventing the charge from leaking off of the capacitor.

   During the discharge portion of the cycle the SCR is triggered to turn ON. The HEP240 transistor turns OFF interrupting the charging process. The discharge path is through the two parallel diodes, through the SCR and laser diode, and back through the 3Ω resistor. Since the RC time constant of the circuit is so low, a sharp current pulse results from the discharge driving the laser diode.

   The triggering of the SCR is done by the waveform at the trigger input. The trigger shaping circuit shown is designed to make the trigger waveform "spikier" to precisely trigger the SCR.

2. Note the power supply connections as provided in the Equipment Setup diagram (Figure 2 on page 9). [**DANGER! HIGH VOLTAGE!**] Note especially the location of the high voltage input and TEST POINT 2 as these locations will have high voltage present when the supply is energized.

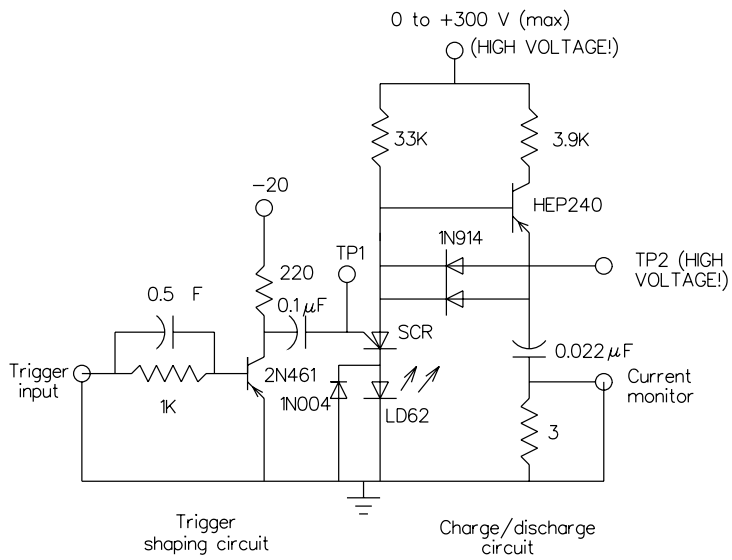

Figure 1: Laser pulser schematic.

3. Perform the turn-on procedure listed later in this experiment.

4. Observe the current pulse passing through the laser by observing the CURRENT MONITOR output. (Why is this current through the 3Ω resistor the same as the the laser current?) The current pulse should be a large negative pulse with a small positive overshoot. Compute the the peak current through the laser. Measure the pulse width (at half maximum) of the current pulse. Measure the rise time and fall time of the pulse (10% to 90% points).

5. Observe the capacitor charging waveform from TEST POINT 2 (**DANGER! This test point has high voltage.** *Before attaching or detaching the oscilloscope probe,* turn off the high voltage power supply.) Observe that the capacitor has plenty of time to be fully charged by the charging circuit before being discharged. Based on this observed charging waveform, what is the maximum PRF (pulse repetition frequency) that could be supported by the charging system?

6. Look at the SCR waveform at TEST POINT 1 to observe the effect of the pulse shaping circuit.

7.
   - If the power output of the laser diode is typically 0.25 watts for every ampere of drive current, estimate the peak power output of your laser.
   - Compute the energy per pulse.
   - Compute the average power delivered by the pulse train.
   - Measure the average dc current from the high voltage supply and compute the dc power delivered to the diode.

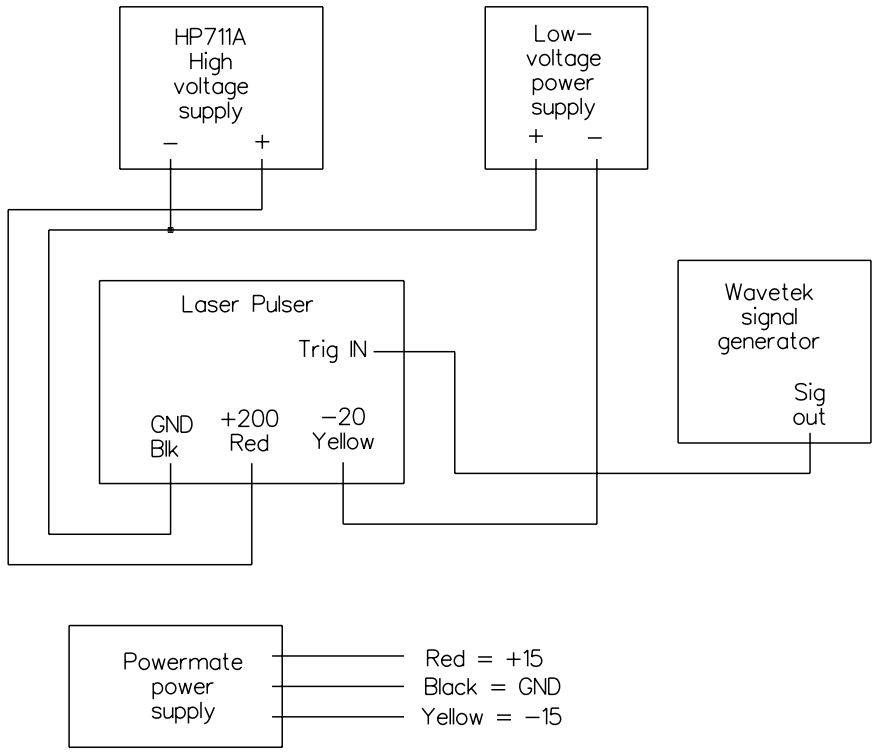

Figure 2: Interconnection diagram. **DANGER! <u>High voltages</u> are present at the output of the HP711 power supply and Test Point 2 on the pulser.**

- Calculate the efficiency of the transmitter (i.e., the ratio of the optical power out to the dc electrical power in).

8. Observe the output of the optical receiver (Fig. 3 on the following page). (Note: The speed of response of the detector-preamp combination is much slower than the laser pulse thereby producing a distorted replica of the optical waveform.)

9.
   - Turn down the high voltage supply to 0 volts.
   - Slowly turn up the the voltage by 10 volt increments up to 250 volts.
   - For each value of high voltage, measure the amplitude of the detector output and the value of the voltage across the 3-Ω current monitor resistor.
   - From your measurments, plot the amplitude of the the detected output vs. the peak current through the laser on linear graph paper.
   - From your plot, find the value of the laser's threshold current.

<u>Report</u>:

Submit a brief one page report together with any data measured or observed. This report is due within one week of completing the experiment.

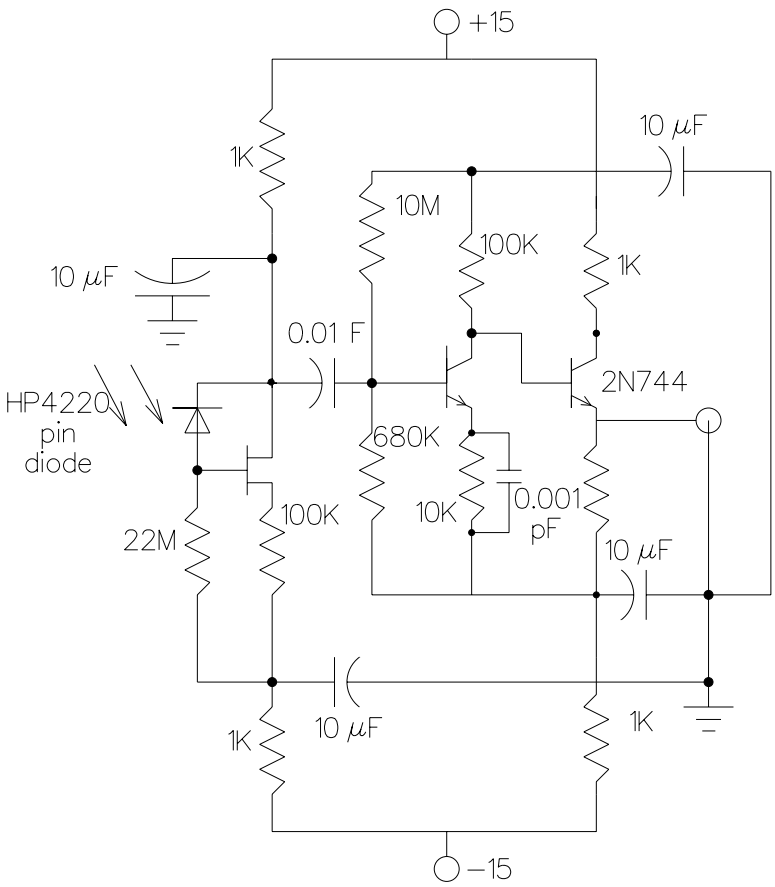

Figure 3: Laser receiver schematic.

TURN-ON PROCEDURE

1. Check all power supply leads for proper polarity.
2. Turn on the dual supply.
3. Turn on the ac switch of the high voltage power supply and *allow 30 seconds of warmup.* Set the control voltage for 200 volts. *Do NOT turn on the dc switch until step 6!*
4. Turn on the low voltage power supply and set for 20 volts.
5. Set the attenuator of the Wavetek to −20 dB, the output level (in the center of the function control) fully counterclockwise, the function control to negative pulses, the frequency dial to 1, and the FREQ Hz dial to 1 KHz. The SYMMETRY dial should be in the detent position (full counterclockwise) and the DC OFFSET should be OFF.

6. Turn on the dc switch of the high voltage supply. *This energizes the high voltage portions of the circuit.*

7. Increase the output level of the Wavetek until the current meter of the high voltage supply suddenly increases to about 4 or 5 mA. (You must depress the 10 mA button.) This sudden increase indicates that the SCR is now firing. With the IR viewer check that the laser is operating.

8. The laser output may be varied by changing the high voltage level. *Do <u>not</u> increase the voltage above 300 volts!* A level of 200—250 volts is adequate for this experiment.