4 DISTURBANCES AND TRACKING SYSTEMS

The best way to start with the introduction of the reference input is via our submarine example:

Example: Once more, consider the submarine equations of motion

$$\begin{aligned}
\dot{\theta} &= q \ , \\
\dot{w} &= a_{11}Uw + a_{12}Uq + a_{13}z_{GB}\theta + b_1U^2\delta \ , \\
\dot{q} &= a_{21}Uw + a_{22}Uq + a_{23}z_{GB}\theta + b_2U^2\delta \ .
\end{aligned}$$

We have a feedback control law which will guarantee stability, of the form

$$\delta = -k_1\theta - k_2w - k_3q \ ,$$

where the gains k_1, k_2, k_3 correspond, say, to the -0.3 poles. What if we wanted the boat to stabilize to, say, $\theta = \Theta$ where $\Theta \neq 0$? The first reaction might be to use

$$\delta = -k_1(\theta - \Theta) - k_2w - k_3q \ .$$

To see if this is enough let's simulate the system with $\Theta = 20$ degrees, and starting with zero initial conditions. The results are shown in Figure 22, in terms of θ/Θ versus t (solid curve) where it is clear that the system missed its final value, it stabilized but to the wrong angle. To see what went wrong, consider the above equations. At steady state all time derivatives go to zero, which means $\dot{\theta} = q = 0$, $\dot{w} = 0$, and $\dot{q} = 0$. From the equations of motion this means that

$$\begin{aligned}
a_{11}Uw + a_{13}z_{GB}\theta + b_1U^2\delta &= 0 \ , \\
a_{21}Uw + a_{23}z_{GB}\theta + b_2U^2\delta &= 0 \ ,
\end{aligned}$$

and if we use the steady state control law

$$\delta = -k_1\theta + k_1\Theta - k_2w \ ,$$

we get

$$\begin{aligned}
(a_{11}U - b_1U^2k_2)w + (a_{13}z_{GB} - b_1U^2k_1)\theta &= -b_1U^2k_1\Theta \ , \\
(a_{21}U - b_2U^2k_2)w + (a_{23}z_{GB} - b_2U^2k_1)\theta &= -b_2U^2k_1\Theta \ .
\end{aligned}$$

This system of linear equations can be solved for the steady state values of w and θ. Using the gains that correspond to the -0.3 poles design, we find

$$\theta = 0.6679\Theta \ ,$$

which agrees with the simulation results exactly. It seems, therefore, that the above control law can guarantee stability but it needs something extra to ensure steady state accuracy, in

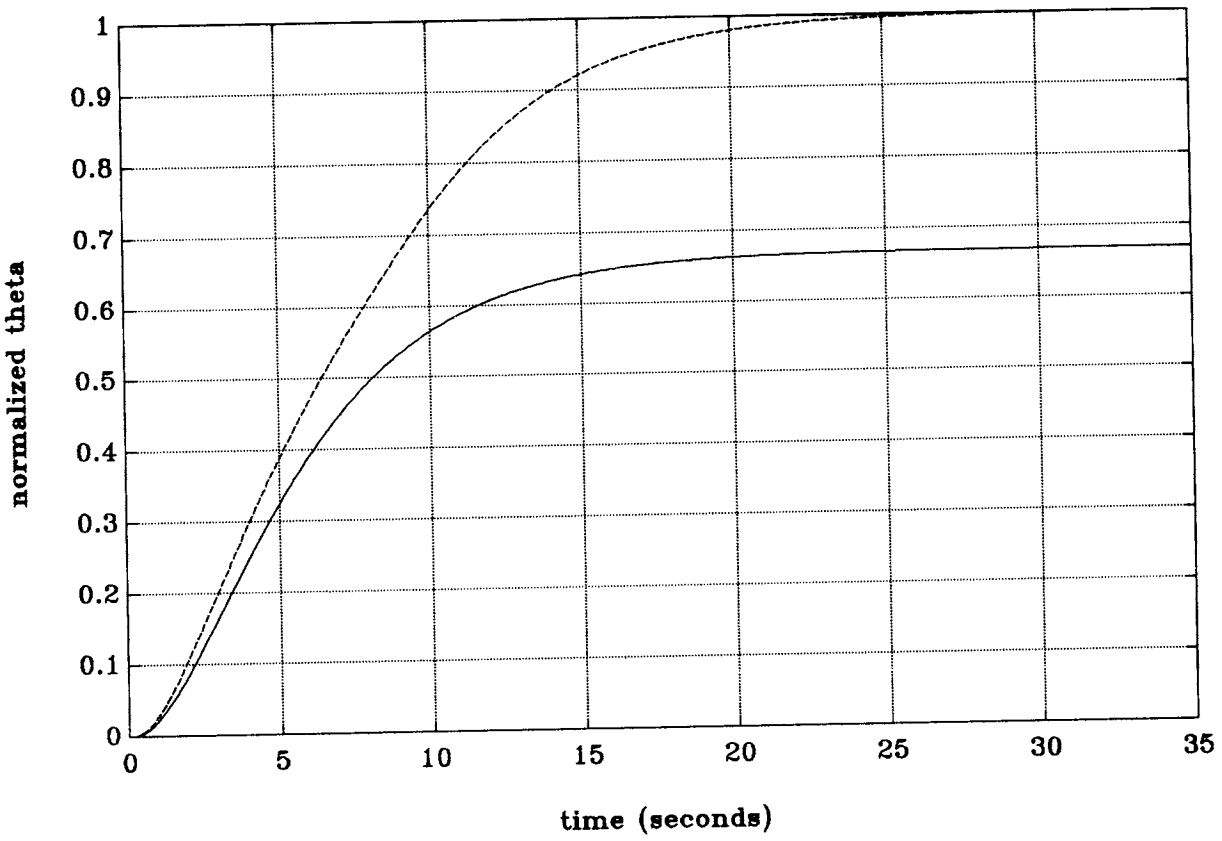

Figure 1: Submarine response in the absence of feedforward control (solid curve) and including feedforward control (dotted curve)

other words we need to add (or subtract) a little more plane action to bring θ up to Θ. We might be motivated then to use a control law of the form

$$\delta = -k_1(\theta - \Theta) - k_2 w - k_3 q - k_0 \ ,$$

where the feedback gains k_1, k_2, k_3 remain the same as before, and k_0 is an unknown gain which is computed such that at steady state we get the desired result $\theta = \Theta$. Therefore, at steady state we have

$$\begin{aligned} a_{11} U w + b_1 U^2 \delta &= -a_{13} z_{GB} \Theta \ , \\ a_{21} U w + b_2 U^2 \delta &= -a_{23} z_{GB} \Theta \ . \end{aligned}$$

The solution is

$$w \approx 0 \ , \quad \text{and} \quad \delta = -0.4202\Theta \ .$$

Substituting into the steady state dive plane angle we get

$$\delta = -k_1(\theta - \Theta) - k_2 w - k_0 \ ,$$

or

$$k_0 = 0.4202\Theta \ .$$

This extra gain 0.4202 which multiplies the desired value Θ is called a *feedforward* gain. By incorporating this in the previous control law, we achieve the desired steady state accuracy as shown in the results of Figure 22 with the dotted curve. It seems then that when a non–zero set point is commanded we can still use the same control law we developed before but augmented with an extra term to ensure that the commanded set point is achieved. The formalism of this result, along with the disturbance rejection, occupies the rest of this section.

4.1 Feedforward Control

So far we have considered the design of regulators in which the performance objective has been to achieve a specified closed loop dynamic behavior (i.e., pole locations) of the system in response to arbitrary initial disturbances. A more general design objective is to control the system error not only for initial disturbances, but also for persistent disturbances, and also to track reference inputs.

Say our system is

$$\dot{x} = Ax + Bu + Fx_d \ ,$$

where x is the $n \times 1$ state vector, u is the $m \times 1$ control vector, and x_d is a $d \times 1$ disturbance vector. To make things even more interesting suppose that we want to track a reference input x_r in the presence of the disturbances x_d, where the reference input has its own dynamics

$$\dot{x}_r = A_r x_r \ .$$

We are concerned here with the error

$$e = x - x_r \ ,$$

between the actual state x and the reference state x_r. What we need then is a differencial equation in e,

$$\begin{aligned} \dot{e} &= \dot{x} - \dot{x}_r \\ &= A(e + x_r) + Bu + Fx_d - A_r x_r \\ &= Ae + (A - A_r)x_r + Fx_d + Bu \\ &= Ae + Bu + Ex_0 \ , \end{aligned}$$

where we have denoted

$$x_0 = \begin{bmatrix} x_r \\ x_d \end{bmatrix} \ ,$$

a $(n + d) \times 1$ vector containing both the reference inputs and the disturbances, and

$$E = \begin{bmatrix} A - A_r & F \end{bmatrix} \ ,$$

a $(n + d) \times n$ augmented matrix.

Consider a control law of the form

$$u = -Ke - K_0 x_0 \ .$$

Then the error dynamics becomes

$$\dot{e} = Ae + Ex_0 - B(Ke - K_0 x_0) \ .$$

If it were possible it would be desirable to choose the gains K and K_0 to keep the system error e at zero. As we will see shortly though, this is not always possible. More reasonable performance objectives would be the following:

1. The closed loop system should be asymptotically stable.
2. A linear combination of the error state variables (rather than the entire state vector) is to be zero at steady state.

The first objective is met by placing the poles of $(A - BK)$ in the left half s–plane. At steady state we have

$$\dot{e} = 0 \ ,$$

which gives

$$(A - BK)e = (BK_0 - E)x_0 \ ,$$

and the steady state error is

$$e = (A - BK)^{-1}(BK_0 - E)x_0 \ .$$

Now B is $n \times m$, K_0 is $m \times (n+d)$, and E is $(n+d) \times n$. We see, therefore, that only if we have as many inputs as there are states $n = m$ we can choose $K_0 = B^{-1}E$ to make e zero at steady state. In practice we have $m < n$ which means that we cannot make $e = 0$. Therefore, in general we can only require that some desired output y_d is zero at steady state,

$$y_d = C_d e = 0 \ ,$$

where C_d is a $m \times n$ matrix, so the number of inputs m is the same as the dimension of y_d. Then we can require

$$C_d(A - BK)^{-1}(BK_0 - E)x_0 = 0 \ ,$$

for all x_0, or

$$C_d(A - BK)^{-1}(BK_0 - E) = 0 \ ,$$

or

$$C_d(A - BK)^{-1}BK_0 = C_d(A - BK)^{-1}E \ .$$

Now we see that

$$\underbrace{C_d}_{m\times n}\underbrace{(A - BK)^{-1}}_{n\times n}\underbrace{B}_{n\times m}$$

is $m \times m$ and can be inverted. Therefore, we can choose

$$K_0 = \left[C_d(A - BK)^{-1}B\right]^{-1} C_d(A - BK)^{-1}E \ ,$$

and the steady state requirement $y_d = 0$ has been achieved.

Example: Let's illustrate the procedure with the submarine example. Suppose our objective is to keep constant depth z in the presence of two external disturbances f_1, f_2 (arising, say, from near surface effects at periscope depth). The linearized equations of motion, including the disturbance effects, are

$$\begin{aligned}
\dot{\theta} &= q \ , \\
\dot{w} &= a_{11}Uw + a_{12}Uq + a_{13}z_{GB}\theta + b_1U^2\delta + f_1 \ , \\
\dot{q} &= a_{21}Uw + a_{22}Uq + a_{23}z_{GB}\theta + b_2U^2\delta + f_2 \ , \\
\dot{z} &= -U\theta + w \ ,
\end{aligned}$$

or, in matrix form,

$$\underbrace{\begin{bmatrix} \dot{\theta} \\ \dot{w} \\ \dot{q} \\ \dot{z} \end{bmatrix}}_{\dot{x}} = \underbrace{\begin{bmatrix} 0 & 0 & 1 & 0 \\ a_{13}z_{GB} & a_{11}U & a_{12}U & 0 \\ a_{23}z_{GB} & a_{21}U & a_{22}U & 0 \\ -U & 1 & 0 & 0 \end{bmatrix}}_{A} \underbrace{\begin{bmatrix} \theta \\ w \\ q \\ z \end{bmatrix}}_{x} + \underbrace{\begin{bmatrix} 0 \\ b_1U^2 \\ b_2U^2 \\ 0 \end{bmatrix}}_{B} \underbrace{\delta}_{u} + \underbrace{\begin{bmatrix} 0 & 0 \\ 1 & 0 \\ 0 & 1 \\ 0 & 0 \end{bmatrix}}_{F} \underbrace{\begin{bmatrix} f_1 \\ f_2 \end{bmatrix}}_{x_d} \ .$$

The objective is to keep depth $z = 0$ in the presence of f_1, f_2. The first thing we have to do is to stabilize the system by placing the poles of $(A - BK)$. We do this by using a control law of the form

$$\delta = -k_1\theta - k_2w - k_3q - k_4z \ .$$

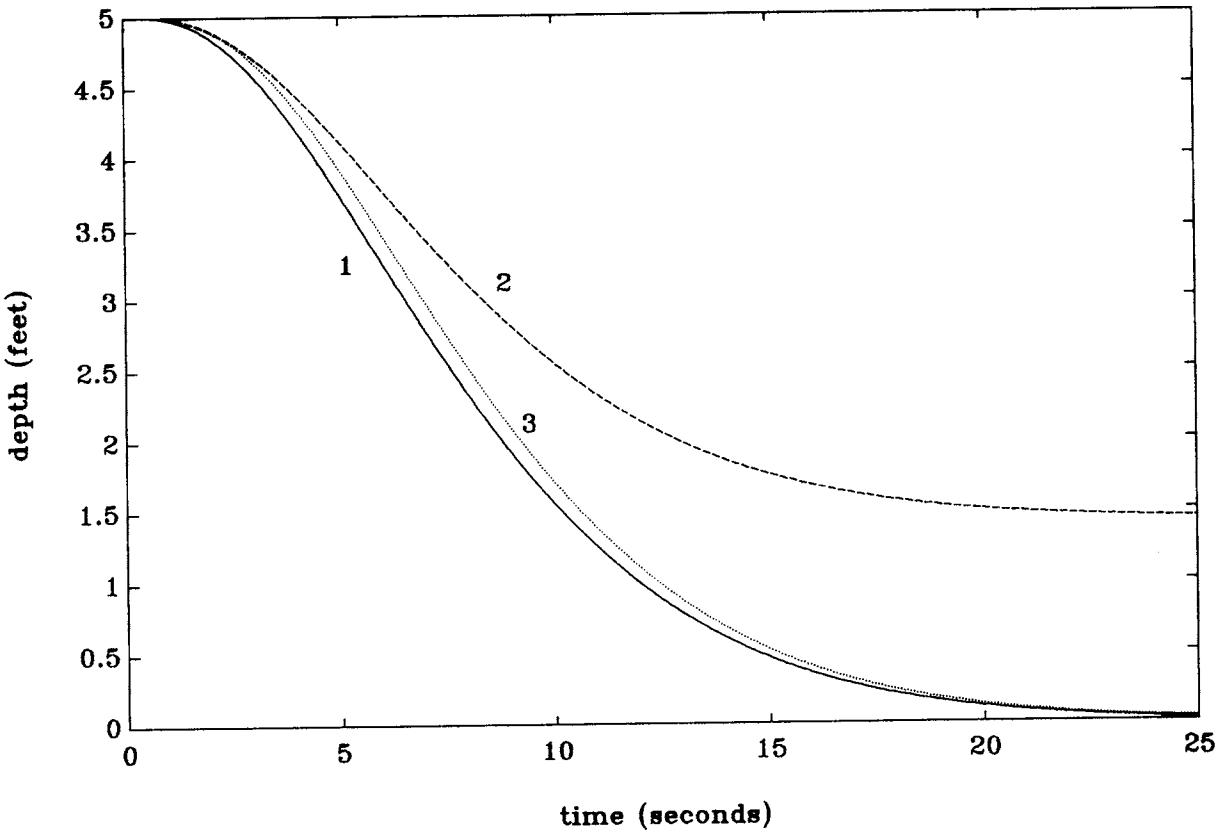

Figure 2: Submarine response: (1: in the absence of external disturbances); (2: with external disturbances and no feedforward control); (3: with external disturbances and including feedforward control)

Selection of poles at -0.3, -0.31, -0.32, -0.33 produces a stable system whose response in the absence of external disturbances is shown in Figure 23 (curve 1).

Use of the above feedback control law when $f_1 \neq 0$, $f_2 \neq 0$ produces stable response but with a nonzero steady state error, as expected; see curve 2 in the figure, with $f_1 = 0.005$ and $f_2 = -0.01$. In order to achieve the desired depth we introduce a general feedforward term in the control law

$$\delta = -k_1\theta - k_2 w - k_3 q - k_4 z - k_0 \ ,$$

where the feedback gains k_1, k_2, k_3, k_4 remain the same as before, and the feedforward gain k_0 will be determined such that $z = 0$ at steady state. At steady state we get $q = 0$ from the $\dot{\theta}$ equation and $w = U\theta$ from $\dot{z} = 0$. The steady state control law becomes

$$\delta = -k_1\theta - k_2 U\theta - k_0 \ ,$$

where we have imposed the requirement $z = 0$. The $\dot{w}$ and $\dot{q}$ equations yield

$$\begin{aligned} a_{11}U^2\theta + a_{13}z_{GB}\theta + b_1U^2\delta + f_1 &= 0 \ , \\ a_{21}U^2\theta + a_{23}z_{GB}\theta + b_2U^2\delta + f_2 &= 0 \ , \end{aligned}$$

or, if we substitute in the expression for δ,

$$\begin{aligned} (a_{11}U^2 + a_{13}z_{GB} - b_1U^2k_1 - b_1U^3k_2)\theta - b_1U^2k_0 &= -f_1 \ , \\ (a_{21}U^2 + a_{23}z_{GB} - b_2U^2k_1 - b_2U^3k_2)\theta - b_2U^2k_0 &= -f_2 \ . \end{aligned}$$

Substituting in numerical values we can find

$$k_0 = 1.4312 f_1 - 11.1353 f_2 \ ,$$

and we can write then the complete control law as

$$\delta = 3.0673\theta + 1.1668w + 2.7562q - 0.0835z - 1.4312f_1 + 11.1353f_2 \ ,$$

where the feedback gains correspond to the -0.3 pole selection as we mentioned before. If we simulate the system using this control law we see that the response gets to its desired value in the presence of nonzero f_1 and f_2 (curve 3). We should comment here that from the above two equations which were used to compute k_0 we can see that, in general, we get a nonzero pitch angle θ at steady state. This, similar to the set–and–drift in currents, demonstrates that in the presence of disturbances it is in general impossible to keep *all* the state variables of a system to their desirable values.

We can get the same result by applying the general formula derived in this section. We have

$$\begin{aligned} \delta &= -Ke - K_0x_0 \\ &= -k_1(\theta - \theta_r) - k_2(w - w_r) - k_3(q - q_r) - k_4(z - z_r) \\ &\qquad -k_{01}\theta_r - k_{02}w_r - k_{03}q_r - k_{04}z_r - k_{05}f_1 - k_{06}f_2 \ , \end{aligned}$$

where the subscript r indicates the reference input states, which are zero in our case. The general equation for K_0 is

$$K_0 = \left[C_d(A - BK)^{-1}B\right]^{-1} C_d(A - BK)^{-1}E \ .$$

The above matrices are (verify the calculations)

$$A = \begin{bmatrix} 0 & 0 & 1 & 0 \\ 0.0135 & -0.3220 & -0.7102 & 0 \\ -0.0360 & 0.1260 & -0.7395 & 0 \\ -5 & 1 & 0 & 0 \end{bmatrix} , \quad B = \begin{bmatrix} 0 \\ 0.0322 \\ -0.0857 \\ 0 \end{bmatrix} ,$$

$$E = \begin{bmatrix} 0 & 0 & 1 & 0 & 0 & 0 \\ 0.0135 & -0.3220 & -0.7102 & 0 & 1 & 0 \\ -0.0360 & 0.1260 & -0.7395 & 0 & 0 & 1 \\ -5 & 1 & 0 & 0 & 0 & 0 \end{bmatrix} , \quad C_d = \begin{bmatrix} 0 & 0 & 0 & 1 \end{bmatrix} ,$$

$$K = \begin{bmatrix} k_1 & k_2 & k_3 & k_4 \end{bmatrix} = \begin{bmatrix} -3.0673 & -1.1668 & -2.7562 & 0.0835 \end{bmatrix} .$$

Using these we find

$$\begin{aligned} K_0 &= \begin{bmatrix} k_{01} & k_{02} & k_{03} & k_{04} & k_{05} & k_{06} \end{bmatrix} \\ &= \begin{bmatrix} -3.0673 & -1.1668 & -2.7562 & 0 & 1.4312 & -11.1353 \end{bmatrix} , \end{aligned}$$

and substituting into the expression for δ we get

$$\delta = 3.0673\theta + 1.1668w + 2.7562q - 0.0835(z - z_r) - 1.4312f_1 + 11.1353f_2 \ ,$$

the same control law as before.

4.2 Disturbance Estimation

Recall that the previous procedure was given a system with reference input x_r and disturbance x_d,

$$\begin{aligned} \dot{x} &= Ax + Bu + Fx_d \ , \\ \dot{x}_r &= A_r x_r \ , \end{aligned}$$

we form the error

$$e = x - x_r \ ,$$

and the equation for the error dynamics

$$\dot{e} = Ae + Bu + Ex_0 \ ,$$

with

$$x_0 = \begin{bmatrix} x_r \\ x_d \end{bmatrix} , \quad E = \begin{bmatrix} A - A_r & F \end{bmatrix} .$$

The control law was

$$u = -Ke - K_0 x_0 \ ,$$

where K is computed from stability requirements by pole–placing $(A - BK)$, and K_0 is computed from the steady state accuracy requirement

$$y_d = C_d e = 0 \quad \text{at steady state} \ ,$$

by computing

$$K_0 = \left[C_d (A - BK)^{-1} B \right]^{-1} C_d (A - BK)^{-1} E \ .$$

The above process requires knowledge of x_0, which contains both the reference input x_r and the disturbances x_d. If direct measurement of x_0 is not possible (usually we know what the reference input x_r is but we cannot measure the disturbance x_d), estimation of x_0 is necessary. In order to estimate x_0 we need to assume a "model" for the disturbance, $\dot{x}_d = A_d x_d$; i.e., whether the disturbances are fairly constant, oscillatory, and so on. The complete system is then

$$\begin{aligned} \dot{x} &= Ax + Bu + Fx_d \ , \\ \dot{x}_d &= A_d x_d \ , \\ \dot{x}_r &= A_r x_r \ . \end{aligned}$$

Define a new augmented state vector

$$\underline{x} = \begin{bmatrix} e \\ x_0 \end{bmatrix} \ .$$

The new system is then written as

$$\underline{\dot{x}} = \underline{A} \cdot \underline{x} + \underline{B} u \ ,$$

where

$$\underline{A} = \begin{bmatrix} A & E \\ 0 & A_0 \end{bmatrix} \ , \quad A_0 = \begin{bmatrix} A_r & 0 \\ 0 & A_d \end{bmatrix} \ , \quad \underline{B} = \begin{bmatrix} B \\ 0 \end{bmatrix} \ .$$

We assume that the observation (measurement) vector y depends on both the error e and the vector x_0,

$$y = Ce + Dx_0 = \underline{C} \cdot \underline{x} \ , \quad \underline{C} = \begin{bmatrix} C & D \end{bmatrix} \ .$$

We can apply now the general observer equation to the new augmented system $\underline{x}$,

$$\dot{\hat{\underline{x}}} = \underline{A} \cdot \underline{x} + \underline{B} u + \underline{L}(y - \underline{C} \cdot \underline{x}) \ ,$$

where $\underline{L}$ is computed by pole–placement of $(\underline{A} - \underline{L} \cdot \underline{C})$ as before. This procedure will produce a full order estimator for the augmented system, assuming of course that the augmented system is observable. In the same way we can design a reduced order estimator for the augmented system to estimate those states and disturbances that are not directly measurable. The key for the above procedure is to treat the disturbances as extra states; although we cannot control a disturbance we can estimate it by observing its effects on the system.

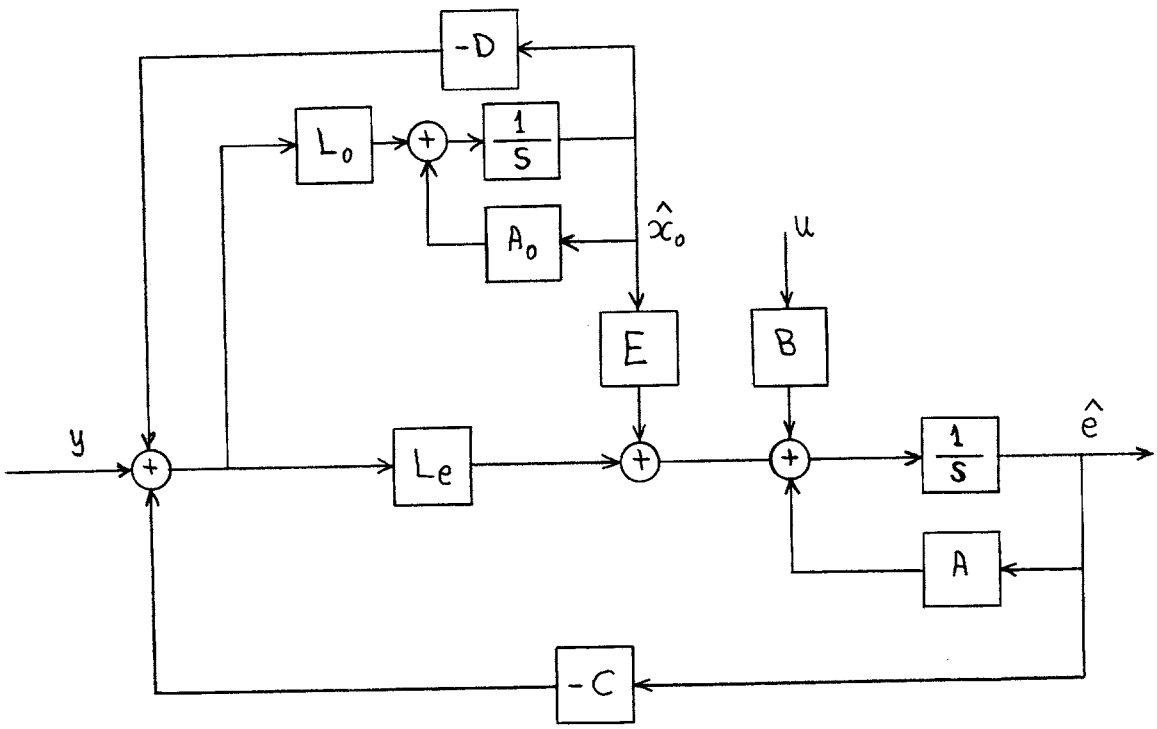

Figure 3: Block diagram for disturbance estimation

Separating the above full order observer equation into equations for the system error estimate $\widehat{e}$ and the error in estimating x_0, we get

$$\begin{aligned} \dot{\widehat{e}} &= A\widehat{e} + Bu + E\widehat{x}_0 + L_e(y - C\widehat{e} - D\widehat{x}_0) \ , \\ \dot{\widehat{x}}_0 &= A_0\widehat{x}_0 + L_0(y - C\widehat{e} - D\widehat{x}_0) \ . \end{aligned}$$

The block diagram is presented in Figure 24. We can see from this block diagram that if x_0 is constant ($A_0 = 0$) and $D = 0$, then there are integrators in parallel to the path through L_e. This means that in the detrmination of $\widehat{e}$ there exists a path proportional to the integral of the residual $r = y - C\widehat{e}$ in addition to the path through L_e which is proportional to the residual itself. Because of this integral path it is possible for r to become zero without $\widehat{x}_0$ going to zero. Therefore, we can produce a nonzero control signal u, even when the system error is zero. In classical control system design this is achieved by means of control action; here it is achieved automatically by using an observer to estimate the unmeasurable x_0.

With the above estimates $\widehat{e}$ and $\widehat{x}_0$, the control law for the compensator is

$$u = -K\widehat{e} - K_0\widehat{x}_0 \ .$$

We refer to this technique as the disturbance estimation and compensation method.

Example: Consider the control law of the previous example. In general, the disturbance forces f_1, f_2 are unknown, so we have to use

$$\delta = 3.0673\widehat{\theta} + 1.1668\widehat{w} + 2.7562\widehat{q} - 0.0835\widehat{z} - 1.4312\widehat{f}_1 + 11.1353\widehat{f}_2 \ .$$

In order to estimate f_1 and f_2 we first have to assume their dynamics. This is based on fairly general physical considerations. In our case, since both f_1 and f_2 are assumed to model free surface suction effects we can assume them to be relatively constant; i.e., $\dot{f}_1 = \dot{f}_2 = 0$. The equations of motion then are

$$\begin{aligned}
\dot{\theta} &= q \ , \\
\dot{w} &= a_{11}Uw + a_{12}Uq + a_{13}z_{GB}\theta + b_1U^2\delta + f_1 \ , \\
\dot{q} &= a_{21}Uw + a_{22}Uq + a_{23}z_{GB}\theta + b_2U^2\delta + f_2 \ , \\
\dot{z} &= -U\theta + w \ ,
\end{aligned}$$

together with

$$\begin{aligned}
\dot{f}_1 &= 0 \ , \\
\dot{f}_2 &= 0 \ .
\end{aligned}$$

In matrix form the augmented system becomes

$$\underbrace{\begin{bmatrix} \dot{\theta} \\ \dot{w} \\ \dot{q} \\ \dot{z} \\ \dot{f}_1 \\ \dot{f}_2 \end{bmatrix}}_{\dot{x}} = \underbrace{\begin{bmatrix} 0 & 0 & 1 & 0 & 0 & 0 \\ a_{13}z_{GB} & a_{11}U & a_{12}U & 0 & 1 & 0 \\ a_{23}z_{GB} & a_{21}U & a_{22}U & 0 & 0 & 1 \\ -U & 1 & 0 & 0 & 0 & 0 \\ 0 & 0 & 0 & 0 & 0 & 0 \\ 0 & 0 & 0 & 0 & 0 & 0 \end{bmatrix}}_{A} \underbrace{\begin{bmatrix} \theta \\ w \\ q \\ z \\ f_1 \\ f_2 \end{bmatrix}}_{x} + \begin{bmatrix} 0 \\ b_1U^2 \\ b_2U^2 \\ 0 \\ 0 \\ 0 \end{bmatrix} \delta \ .$$

Let's assume that z, θ, q are measurable (remember from Section 1.7 that we have to measure z); can we estimate w, f_1, and f_2? The measurement equation is

$$\underbrace{\begin{bmatrix} \theta \\ q \\ z \end{bmatrix}}_{y} = \underbrace{\begin{bmatrix} 1 & 0 & 0 & 0 & 0 & 0 \\ 0 & 0 & 1 & 0 & 0 & 0 \\ 0 & 0 & 0 & 1 & 0 & 0 \end{bmatrix}}_{C} \underbrace{\begin{bmatrix} \theta \\ w \\ q \\ z \\ f_1 \\ f_2 \end{bmatrix}}_{x} \ .$$

Using MATLAB we can see that the system is observable (the rank of the (A, C) observability matrix is 6), so we should be able to estimate all states. Selecting observer poles at -0.6, -0.61, -0.62, -0.63, -0.64, and -0.65, we can get the (full) observer matrix

$$L = [\ell_{ij}] = \begin{bmatrix} 0.6234 & 1.0000 & 0.0000 \\ 13.3973 & -0.6743 & 0.6681 \\ 1.6255 & 0.5153 & 0.0378 \\ 9.4327 & 0.0377 & 1.5498 \\ 5.6251 & 0.0153 & 0.2424 \\ -0.0990 & 0.3905 & -0.0492 \end{bmatrix} \ .$$

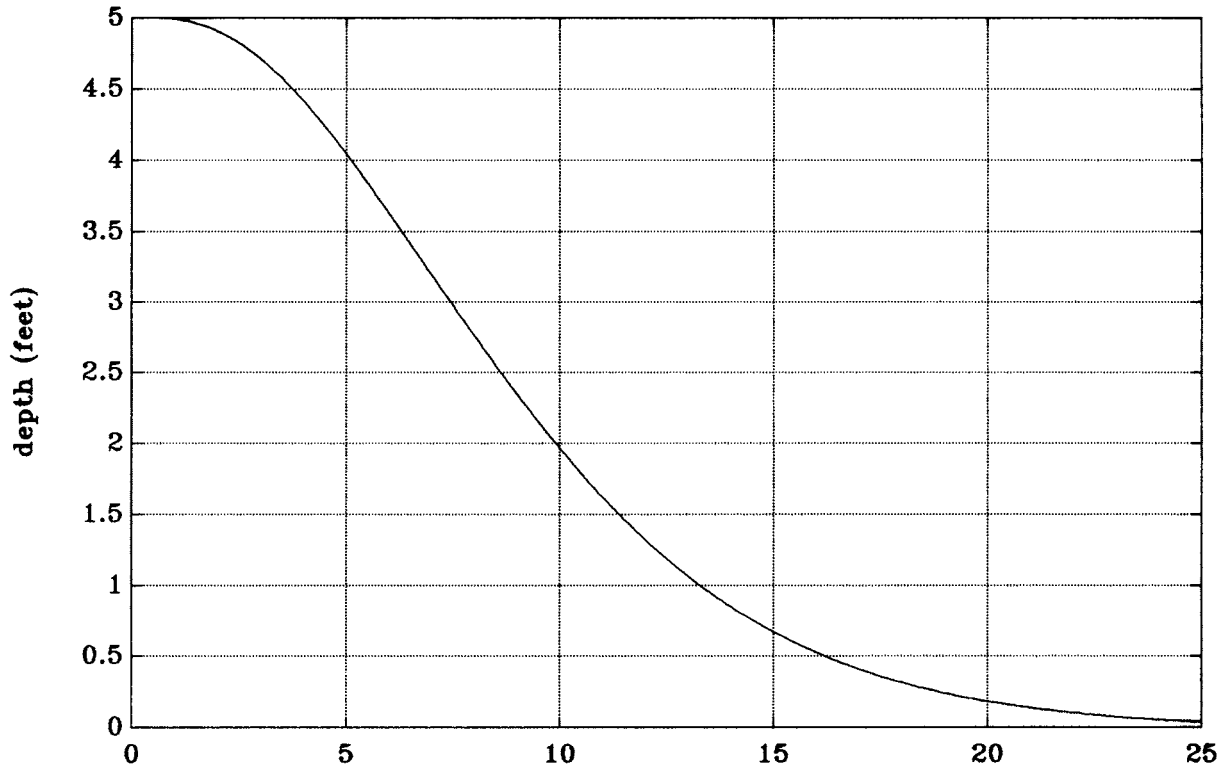

Figure 4: Depth response with disturbance estimation and compensation

The observer equations are then

$$\dot{\widehat{x}} = A\widehat{x} + Bu + L(y - C\widehat{x}) \ ,$$

or

$$\begin{aligned}
\dot{\widehat{\theta}} &= \widehat{q} + \ell_{11}(\theta - \widehat{\theta}) + \ell_{12}(q - \widehat{q}) + \ell_{13}(z - \widehat{z}) \ , \\
\dot{\widehat{w}} &= a_{11}U\widehat{w} + a_{12}U\widehat{q} + a_{13}z_{GB}\widehat{\theta} + \widehat{f}_1 + b_1U^2\delta + \ell_{21}(\theta - \widehat{\theta}) + \ell_{22}(q - \widehat{q}) + \ell_{23}(z - \widehat{z}) \ , \\
\dot{\widehat{q}} &= a_{21}U\widehat{w} + a_{22}U\widehat{q} + a_{23}z_{GB}\widehat{\theta} + \widehat{f}_2 + b_2U^2\delta + \ell_{31}(\theta - \widehat{\theta}) + \ell_{32}(q - \widehat{q}) + \ell_{33}(z - \widehat{z}) \ , \\
\dot{\widehat{z}} &= -U\widehat{\theta} + \widehat{w} + \ell_{41}(\theta - \widehat{\theta}) + \ell_{42}(q - \widehat{q}) + \ell_{43}(z - \widehat{z}) \ , \\
\dot{\widehat{f}}_1 &= \ell_{51}(\theta - \widehat{\theta}) + \ell_{52}(q - \widehat{q}) + \ell_{53}(z - \widehat{z}) \ , \\
\dot{\widehat{f}}_2 &= \ell_{61}(\theta - \widehat{\theta}) + \ell_{62}(q - \widehat{q}) + \ell_{63}(z - \widehat{z}) \ .
\end{aligned}$$

Simulation results in terms of z, $\widehat{f}_1/f_1$, and $\widehat{f}_2/f_2$ versus t are presented in Figures 25 and 26.

We can see that the response goes to zero, as it should. The initial condition for $\widehat{z}$ was the same as for z, this is fair since z is measurable. The initial conditions for $\widehat{f}_1$ and $\widehat{f}_2$ were both zero, we have no knowledge of free surface effect forces and moments, and we can see that they converge to the actual values of f_1, f_2 quickly.

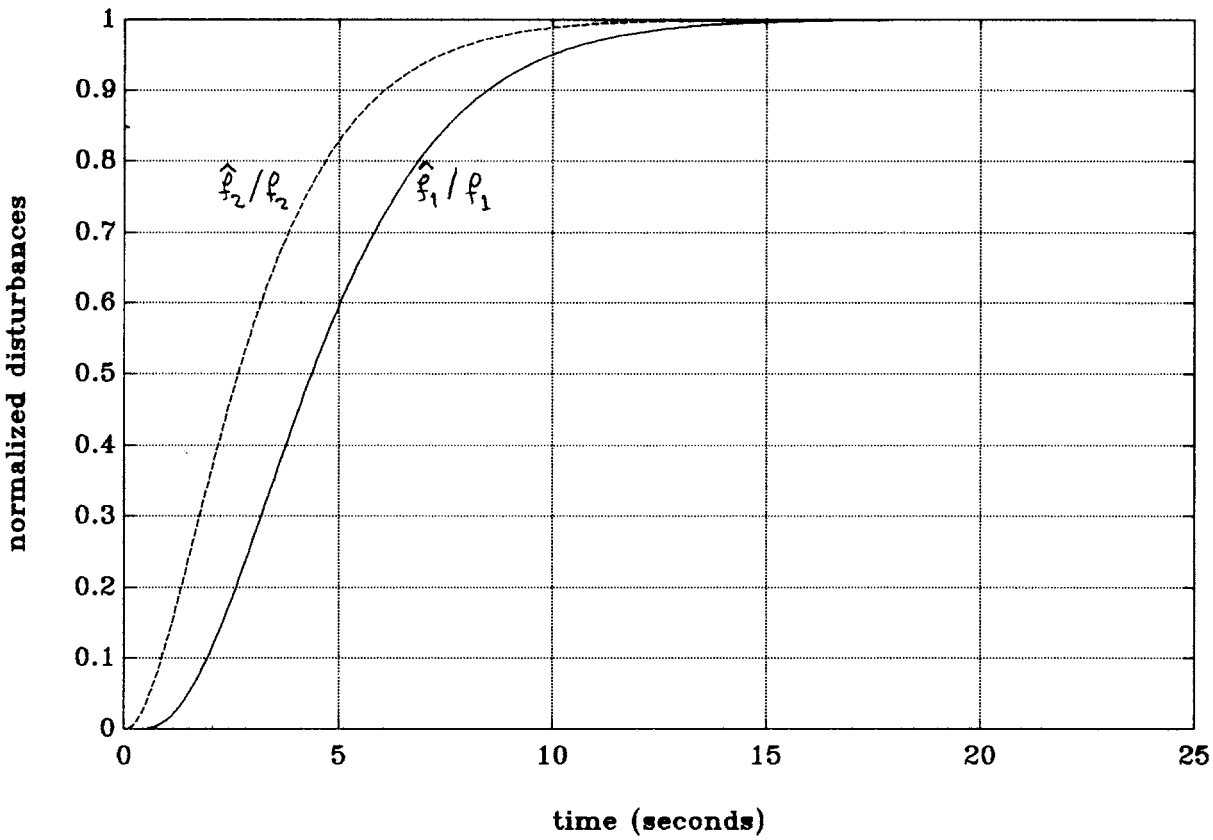

Figure 5: Estimation of unknown disturbances

4.3 Integral Control

The disturbance estimation and compensation technique will work well if we can have a fairly good idea of what kind of disturbances will affect the system. In our submarine example it may not be very hard to guess some kind of external forces and moments, but this is not always so easy. In order to produce good performance with a nonzero set point (reference input) and steady disturbances we need to introduce some sort of integral control behavior. It should be pointed out that integral control is an alternative to the disturbance estimation and compensation technique of the previous section, in fact the two methods are very closely related. Both techniques achieve the same thing, zero steady state error, and both have their advantages and disadvantages.

A typical state variable feedback control law feeds back the coordinates and their derivatives. From Newton's law we obtain second order ordinary differential equations for our systems and we often use the positions and velocities as the states. The state variable feedback thus produces a proportional–plus–derivative (PD) type of feedback. Suppose that we are primarily interested in some desired output

$$z = Dx \ ,$$

where z is $m \times 1$. It is for this output z that we want to maintain a desirable value in the presence of disturbances. If the desired value of z is z_d one way to introduce integral control characteristics is to introduce new state variables; i.e., augment the state vector,

$$\dot{v} = Dx - z_d \ .$$

Feedback of v then will produce an integral of the error $z - z_d$.

More specifically in the $z_d = 0$ case,

$$\dot{x} = Ax + Bu \ .$$

The new state variable is

$$\dot{v} = z = Dx \ ,$$

or

$$v = \int z \, dt \ .$$

The augmented system is

$$\begin{bmatrix} \dot{x} \\ \dot{v} \end{bmatrix} = \begin{bmatrix} A & 0 \\ D & 0 \end{bmatrix} \begin{bmatrix} x \\ v \end{bmatrix} + \begin{bmatrix} B \\ 0 \end{bmatrix} u \ .$$

The control law is obtained by pole–placement of this system

$$u = -\begin{bmatrix} K_0 & K_I \end{bmatrix} \begin{bmatrix} x \\ v \end{bmatrix} \ ,$$

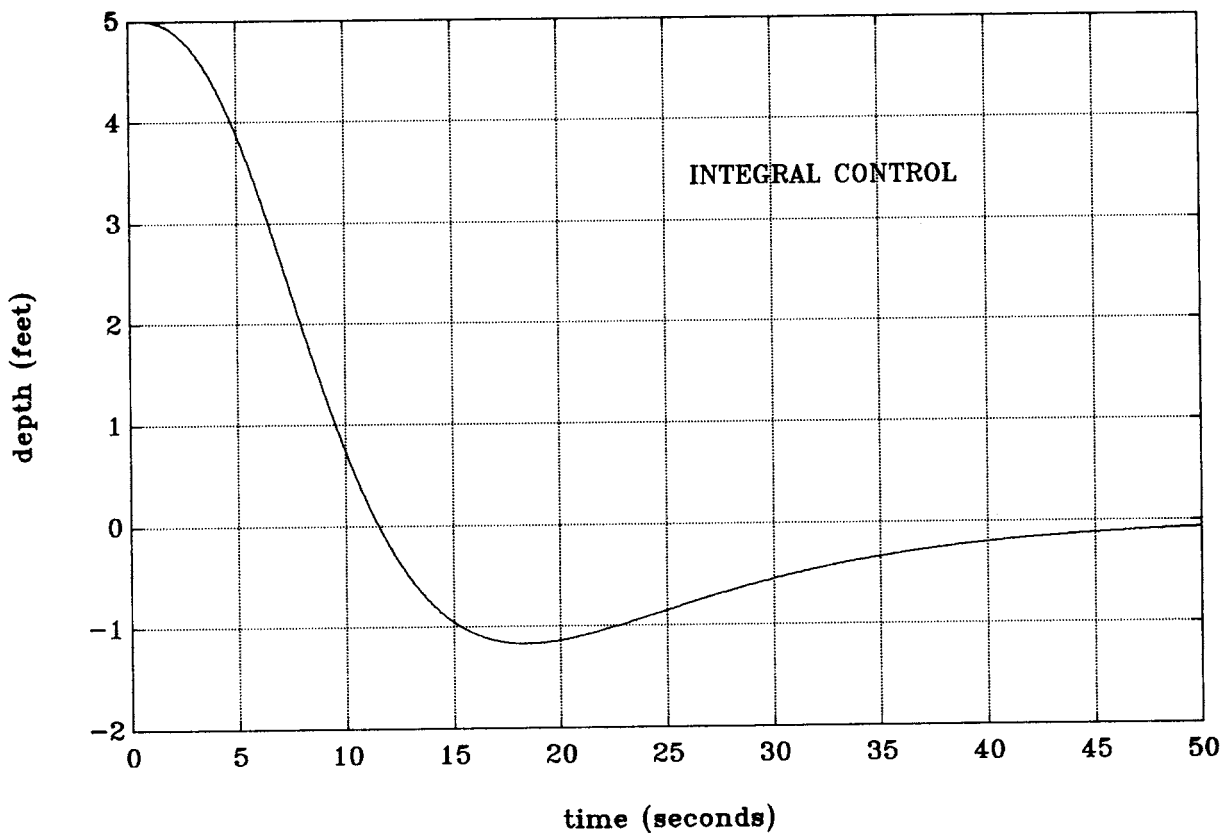

Figure 6: Response of integral control

or

$$
\begin{aligned}
u &= -K_0 x - K_I v \\
&= \underbrace{-K_0 x}_{\text{PD action}} \quad \underbrace{-K_I \int z\, dt}_{\text{Integral action}} \quad ,
\end{aligned}
$$

so this is a generalized PID–control.

Example: Consider the submarine equations of motion

$$
\begin{aligned}
\dot{\theta} &= q \ , \\
\dot{w} &= a_{11} U w + a_{12} U q + a_{13} z_{GB} \theta + b_1 U^2 \delta + f_1 \ , \\
\dot{q} &= a_{21} U w + a_{22} U q + a_{23} z_{GB} \theta + b_2 U^2 \delta + f_2 \ , \\
\dot{z} &= -U\theta + w \ .
\end{aligned}
$$

If we want to maintain depth z at its desired value $z = 0$ we introduce a new state equation

$$\dot{z}_I = z \ ,$$

where z_I denotes the integral of z. We can see that steady state accuracy ($z = 0$) is automatically ensured. The augmented system is now

$$\underbrace{\begin{bmatrix} \dot{\theta} \\ \dot{w} \\ \dot{q} \\ \dot{z} \\ \dot{z}_I \end{bmatrix}}_{\dot{x}} = \underbrace{\begin{bmatrix} 0 & 0 & 1 & 0 & 0 \\ a_{13}z_{GB} & a_{11}U & a_{12}U & 0 & 0 \\ a_{23}z_{GB} & a_{21}U & a_{22}U & 0 & 0 \\ -U & 1 & 0 & 0 & 0 \\ 0 & 0 & 0 & 1 & 0 \end{bmatrix}}_{A} \underbrace{\begin{bmatrix} \theta \\ w \\ q \\ z \\ z_I \end{bmatrix}}_{x} + \underbrace{\begin{bmatrix} 0 \\ b_1U^2 \\ b_2U^2 \\ 0 \\ 0 \end{bmatrix}}_{B} \underbrace{\delta}_{u} .$$

We select the closed loop controller poles at -0.30, -0.31, -0.32, -0.33 — same as before — with the fifth pole corresponding to z_I at -0.10. The reason for this is that we want the integrator to correct the error only at steady state, while we would like to maintain the same transient response. As a result, the integrator must be relatively slow compared to the other poles of the system. The control law is

$$\delta = 4.0647\theta + 1.0237w + 3.8698q - 0.1533z - 0.0084z_I \ .$$

Results are shown in Figure 27 for the same values of the disturbances f_1, f_2 as before. We can see that z approaches zero, as it should. The main advantage of the integral control technique is that the desired response will approach its commanded value regardless of the exact type of disturbances. Also, no disturbance estimation is necessary. The main disadvantage is that the integral control response tends to be oscillatory especially if no disturbances are acting. In contrast, the response using the disturbance estimation and compensation technique is, in general, much smoother.